ENDLESS™ POOLS

X2000 SwimCross® System

by Endless™ Pools

OWNER'S MANUAL 50HZ

WELCOME

Watkins Wellness® congratulates you on your decision to enjoy the finest exercise system available. Welcome to the growing family of exercise systems by* ENDLESS POOLS *owners.

OWNER'S MANUAL

This Owner's Manual will acquaint you with the operation and general maintenance of your new exercise system. We suggest that you take some time to carefully review all sections. Please keep this manual available for reference.

If you have questions about any aspect of your exercise system's set-up, operation or maintenance, contact your authorized **ENDLESS POOLS** dealership. They are trained professionals who are familiar with the product, as well as new exercise system ownership concerns. Their expertise will facilitate the enjoyment of your new exercise system.

The serial number/identification label is located within the equipment compartment of your exercise system. The serial number should also be documented on the delivery receipt from your dealer.

IMPORTANT: Watkins Wellness reserves the right to change specifications, or design, without notification and without incurring any obligation.

DATE PURCHASED: _____

DATE INSTALLED: _____

DEALER: _____

ADDRESS: _____

TELEPHONE: _____

MODEL/SERIAL NUMBER: _____

COVER SERIAL NUMBER: _____

In most cities and counties, permits will be required for the installation of electrical circuits or the construction of exterior surfaces (decks and gazebos). In addition, some communities have adopted residential barrier codes which may require fencing and/or self-closing gates on the property to prevent unsupervised access to the exercise system by children. As a general practice, your local Building Department will inform you of any applicable barrier requirements at the time a permit is obtained for the installation of an electrical circuit. Your **ENDLESS POOLS** dealer can provide information on which permits may be required.

TABLE OF CONTENTS

SAFETY INFORMATION

IMPORTANT SAFETY INSTRUCTIONS 1
IMPORTANT EXERCISE SYSTEM INSTRUCTIONS 3

SITE REQUIREMENTS

INDOOR CONSIDERATIONS 4
OUTDOOR CONSIDERATIONS 4
ELECTRICAL REQUIREMENTS 4
DECK INSTALLATION 5
DELIVERY ACCESS 5
X2000 MODEL 6

ELECTRICAL REQUIREMENTS

SINGLE PHASE WIRING 7
EQUIPMENT COMPARTMENT 8
DOOR PANEL REMOVE & REPLACE 8

GETTING STARTED

MAIN EXERCISE SYSTEM FEATURES 9
ADDITIONAL EXERCISE SYSTEM FEATURES 9
HYDROMASSAGE JETS 10
SWIM JETS 10
WATERFALL VALVE 10
AIR CONTROLS 10
DIVERTER VALVE 10
QUICK START-UP INSTRUCTIONS 10

OPERATING INSTRUCTIONS

SWIM SIDE CONTROL PANEL 12
SETTINGS 12
AUDIO IN.STREAM 2 (OPTIONAL) 14
TEMPERATURE CONTROL 14
JETS CONTROL 14
LIGHT CONTROL 15
WI-FI IN.TOUCH 3 (OPTIONAL) 15
PURGE CYCLES 15
ALL OFF / MEMORY ON 15
SPA SIDE CONTROL PANEL 16
SETTINGS 16
INVERT SCREEN 18
TEMPERATURE CONTROL 18
JETS CONTROL 18
LIGHT CONTROL 19
FILTER CYCLES 19
POLLING 19
ALL OFF / MEMORY ON 19
WI-FI IN.TOUCH 3 (OPTIONAL) 19
SMART WINTER MODE 19

WATER QUALITY AND MAINTENANCE

BASIC INFORMATION 20
CHEMICAL SAFETY 20
HOW TO ADD CHEMICALS TO THE WATER 20
FUNDAMENTALS OF WATER MAINTENANCE 20
THE **SWIMCROSS** WATER MAINTENANCE PROGRAM 21
VACATION WATER CARE INSTRUCTIONS 22
GLOSSARY 23

CARE AND MAINTENANCE

FILTER MAINTENANCE 24
SWIM SIDE FILTER CARTRIDGE REMOVAL AND CLEANING INSTRUCTIONS 24
SPA SIDE FILTER CARTRIDGE REMOVAL INSTRUCTIONS 25
DRAINING YOUR EXERCISE SYSTEM 25
WINTERIZING YOUR EXERCISE SYSTEM 25
CARE OF THE EXTERIOR 26

SERVICE INFORMATION

GENERAL INFORMATION 27
RCD AND HIGH LIMIT THERMOSTAT 27
MISCELLANEOUS SERVICE INFORMATION 27
ACTS INVALIDATING WARRANTY 27
DISCLAIMERS 28
WATKINS WELLNESS CUSTOMER SERVICE 28
TROUBLESHOOTING 28

SAFETY INFORMATION

IMPORTANT SAFETY INSTRUCTIONS

(READ AND FOLLOW ALL INSTRUCTIONS)

NO DIVING

Danger: Diving may result in serious injury or death.

AVOIDING THE RISK TO CHILDREN

DANGER - RISK OF CHILD DROWNING

Extreme caution must be exercised to prevent unauthorized access by children. To avoid accidents, ensure that children cannot use an exercise system unless they are supervised at all times.

WARNING

To reduce the risk of injury, do not permit children to use this exercise system unless they are closely supervised at all times.

- To reduce the risk of injury, lower water temperatures are recommended for young children. Children are especially sensitive to hot water.
- The exercise system should not be used by persons (including children) with reduced physical, sensory or mental capabilities, or lack of experience and knowledge, unless they receive supervision or training.

DO:

- Make sure you always lock any child resistant locks after using the exercise system for your children's safety.
- Test the water temperature with your hand before allowing children to enter the exercise system to be sure that it's comfortable.
- Remind children that wet surfaces can be very slippery. Make sure that children are careful when entering or exiting the exercise system.

DON'T:

- Allow children to climb onto an exercise system cover.
- Allow children to have unsupervised access to the exercise system.

AVOIDING THE RISK OF ELECTROCUTION

DANGER - RISK OF ELECTROCUTION

- Connect only to a grounded source.
- Do not bury the power cord. A buried power cord may result in death, or serious personal injury due to electrocution if direct burial-type cable is not used, or if improper digging occurs.
- A ground terminal (pressure wire connector) is provided on the control box inside the unit to permit connection of a minimum 10 mm^2 solid copper bonding conductor between this point and any metal equipment, metal water pipe, metal enclosures of electrical equipment, or conduit within 1.5 m (5 feet) of the unit as needed to comply with local requirements.
- Do not connect any auxiliary components (for example, cable, additional speakers, headphones, additional audio components) to the audio system unless approved by Watkins Wellness
- Do not self service the audio component by opening or removing exercise system door panel as this may expose dangerous voltage or other risk of injury. Refer all servicing to qualified service personnel.
- Do not attach an external antennae to an exercise system audio system unless installed by a licensed electrician in accordance with your National Electric Code.

WARNING

- To reduce the risk of electrical shock, replace a damaged cord immediately. Failure to do so may result in death or serious personal injury due to electrocution.
- In order to avoid a hazard due to inadvertent resetting of the thermal cut-out, this exercise system must not be supplied through an external switching device, such as a timer, or connected to a circuit that is regularly switched on and off by the utility.
- Always test the residual current device (RCD) before each use of the spa. If the RCD does not perform properly, a ground current is flowing indication the possibility of electric shock. Disconnect power to the exercise system until the fault has been identified and corrected.
- **NOTE:** Failure to wait 30 seconds before resetting the RCD may cause the exercise system to not work properly, if this happens, repeat the RCD test procedure.
- Your exercise system must be supplied by a ground fault circuit interrupter - residual current device (RCD) - with a tripping rating not exceeding 30 mA in an electrical subpanel.

DANGER - RISK OF ELECTRICAL SHOCK

- Install at least 1.5 m (5 feet) from all metal surfaces. An exercise system may be installed within 1.5 m (5 feet) of a metal surface if each metal surface is permanently connected by a minimum 10 mm^2 solid copper conductor attached to the wire ground connector in the junction box that is provided for this purpose if in accordance with your National Electrical Codes.
- Install your exercise system in such a way that drainage is away from the electrical compartment and from all electrical components.
- Do not permit any electrical appliances, such as a light, telephone, radio, or television within 1.5 m (5 feet) of a exercise system. Failure to maintain a safe distance may result in death, or serious personal injury due to electrocution, if the appliance should fall into the exercise system.

DO:

- Be sure your exercise system is connected to the power supply correctly - use a licensed electrical contractor.
- Disconnect the exercise system from the power supply before draining the exercise system or servicing the electrical components.
- Test the Ground Fault Circuit Interrupter(s) before each use.
- Replace audio components only with identical components (if your exercise system is equipped with an audio component).

DON'T:

- Use the exercise system with the equipment compartment door removed.
- Place electrical appliances within 1.5 m (5 feet) of the exercise system.
- Use an extension cord to connect the exercise system to its power source. The cord may not be properly grounded and the connection is a shock hazard. An extension cord may cause a voltage drop, which will cause overheating of the jet pump motor and motor damage.
- Attempt to open the electrical control box. There are no user serviceable parts inside.

RISKS TO AVOID

⚠ DANGER - RISK OF INJURY

- To reduce the risk of injury to persons, DO NOT remove suction fittings (filter standpipes) located in the filter compartment.
- The suction fittings in the exercise system are sized to match the specific water flow created by the pump. Never replace a suction fitting with one rated less than the flow rate marked on the original suction fitting.
- There is a danger of slipping and falling. Remember that wet surfaces can be very slippery. Take care when entering or exiting the exercise system.
- Never operate exercise system if the suction fittings are broken or missing.
- People with infectious diseases should not use the exercise system.
- Keep any loose articles of clothing, long hair, or hanging jewelry away from rotating jets or other moving components. Long hair should be tied up or placed under a bathing cap.
- Safe water temperature for aquatic exercise is approximately 29.5°C (85°F).
- DO NOT use this exercise system alone.

INCREASED SIDE EFFECTS OF MEDICATION

- The use of drugs or alcohol may cause unconsciousness with the possibility of drowning.
- Persons using medications should consult a physician before using an exercise system; some medication may cause a user to become drowsy, while other medication may affect heart rate, blood pressure, and circulation.
- Persons taking medications which induce drowsiness, such as tranquilizers, antihistamines, or anticoagulants should not use the exercise system.

HEALTH PROBLEMS AFFECTED BY EXERCISE SYSTEM USE

- Pregnant women should consult a physician before using exercise system.
- Persons suffering from obesity, or with a medical history of heart disease, low or high blood pressure, circulatory system problems, or diabetes should consult a physician before using exercise system.

UNCLEAN WATER

- Keep the water clean and sanitized with correct chemical care. The recommended levels for your **SWIMCROSS** exercise system are:

Free Available Chlorine: 1.0-5.0 ppm	Total Alkalinity: 80-120 ppm
Water pH: 7.2-7.8	Calcium Hardness: 75-150 ppm

- Refer to Water Quality and Maintenance section for complete instructions.

IMPORTANT: Turn on the jet pump for at least ten minutes after adding ANY chemicals into the fitness system water.

Clean the filter cartridges monthly to remove debris and mineral buildup which may affect the performance of the jets, limit the flow, or trip the high limit thermostat, which will turn off the entire exercise system.

AVOIDING THE RISK OF HYPERTHERMIA

Prolonged immersion in hot water can result in HYPERTHERMIA, a dangerous condition which occurs when the internal temperature of the body reaches a level above normal 37°C (98.6°F). The symptoms of hyperthermia include unawareness of impending hazard, failure to perceive heat, failure to recognize the need to exit the exercise system, physical inability to exit the exercise system, fetal damage in pregnant women, and unconsciousness resulting in a danger of drowning.

⚠ WARNING

The use of alcohol, drugs, or medication can greatly increase the risk of fatal hyperthermia in exercise systems.

TO REDUCE THE RISK OF INJURY

- The water in the exercise system should never exceed 40°C (104°F). Water temperatures between 26°C and 40°C (79°F and 104°F) are considered safe for a healthy adult. The lower water temperatures are recommended for extended use (exceeding ten minutes) and for young children. Extended use can cause hyperthermia.
- Pregnant or possibly pregnant women should limit exercise system water temperatures to 29.5°C (85°F) consult a physician prior to using this product. Failure to do so may result in permanent injury to your baby.
- Do not use exercise system having water temperatures over 36°C (100°F) immediately following strenuous exercise.
- Keep all breakables, especially glass, away from this exercise system.
- Never insert any objects into any openings.
- Keep all chemicals away from children and pets.
- DO NOT stack chemicals on top of one another.
- NEVER MIX CHEMICALS.
- Sanitizing chemicals must be stored separately from balancing chemicals.

AVOIDING THE RISK OF SKIN BURNS

- To reduce the risk of injury, before entering an exercise system the user should measure the water temperature with an accurate thermometer.
- Test the water with your hand before entering the exercise system to be sure it's comfortable.

SAFETY SIGN

Each **SWIMCROSS** exercise system is shipped with a SAFETY SIGN in the owner's package. The sign, which is required as a condition of Product Listing, should be permanently installed where it is visible to the users of the exercise system. To obtain additional SAFETY SIGNS, contact your **ENDLESS POOLS** dealer. Safety labels that are affixed to the shell are intended to be permanent and should not be removed.

IMPORTANT EXERCISE SYSTEM INSTRUCTIONS

The following contains important exercise system information, and we strongly encourage you to read and apply them.

DO:

- Follow the exercise system Care and Maintenance recommendations stated in this manual.
- Use only approved accessories and recommended exercise system chemicals and cleaners.

DON'T:

- Leave the exercise system exposed to the sun without water or a cover in place. Exposure to direct sunlight can cause solar distress of the shell material.
- Roll or slide the exercise system on its side. This will damage the siding.
- Lift or drag the vinyl cover by using the cover lock straps; always lift or carry the cover by using the handles.
- Attempt to open the electrical control box. There are no user serviceable parts inside. Opening of the control box by the exercise system owner will void the warranty. If you have an operational problem, carefully go through the steps outlined in the Troubleshooting section. If you are not able to resolve the problem, contact your authorized **ENDLESS POOLS** dealer. Many problems can easily be diagnosed over the telephone by an Authorized Service Technician.

EXERCISE SYSTEM SHELL

Your exercise system has an acrylic shell. Stains and dirt generally will not adhere to your exercise system's surface. A soft rag should easily remove most dirt. Most household chemicals are harmful to your exercise system's shell (see below for detailed information on cleaning agents). Always rinse off any exercise system shell cleaning agent with fresh water.

IMPORTANT:

1. The following products are the ONLY approved cleaning agents for your exercise system shell: plain water or Soft Scrub®. The use of alcohol or any other household cleaner other than those listed to clean the exercise system shell surface is NOT recommended. DO NOT use any cleaning products containing abrasives or solvents since they may damage the shell surface, specifically: Simple Green®, Windex® or spa Mitt. NEVER USE HARSH CHEMICALS! Damage to the shell by use of harsh chemicals is not covered under the warranty. Always rinse off any exercise system shell cleaning agent with fresh water.
2. Iron and copper in the water can stain the exercise system shell if allowed to go unchecked. Ask your **ENDLESS POOLS** dealer about a Stain and Scale Inhibitor to use if your exercise system has a high concentration of dissolved minerals.
3. Keep all cleaners out of the reach of children and use care when applying.

SAVE THESE INSTRUCTIONS

SITE REQUIREMENTS

Your exercise system must be installed on a smooth and level surface with a 15 cm (6") concrete slab or wood decking able to support the dead weight found on the back page of this manual.

If a new slab is poured, consult your local electrical codes regarding grounding and bonding. Local code may require a bonding wire to be attached to the reinforcing bar or wire mesh that is embedded in the concrete. If new concrete is being poured, this is the ideal time to install the conduit for the incoming electrical supply.

Even if a new pad has been poured, it is essential that the system site is level and planar. There is a simple way to ensure that this is the case. First, draw a chalk outline of the footprint of your exercise system. Place a six-foot level along and around the footprint of the system. Verify that there are no gaps between the level and floor. Next pour water inside of the chalk footprint. Verify that the water does not puddle inside the footprint.

Should there a be a gap or should the water puddle inside the footprint, call your **ENDLESS POOLS** dealer prior to continuing to discuss the best way to resolve this situation.

INDOOR CONSIDERATIONS

- Local electrical and plumbing codes.
- Ventilation fans and/or dehumidifiers should be provided to handle the humidity developed by your exercise system. Walls, ceiling and wood trim should be water resistant, also.
- Chemicals will vaporize from the water and may cause an odor and possibly corrosion to certain home hardware. Never store chemicals inside the exercise system cabinet.
- During the normal use of the exercise system, water will escape the vessel. Never place on or over any materials, which may be damaged by this water or the chemicals within the water. Keep damageable materials far enough away to avoid water damage, even if the exercise system should lose all its water.
- Consider and prepare for the unlikely event of rapid drainage. If placement of the exercise system is permanent, you may wish to provide floor drains to accommodate draining, etc. Always leave room all around the exercise system for easy access in case repairs are necessary.
- Consider and prepare for the unlikely event of removal.
- Do not set exercise system on finished floor without a waterproof barrier protection underneath.
- The exercise system should be close to a source of water.
- Do not use the exercise system above a finished living area due to the risk of water damage.
- The exercise system may be used with in-floor installation or a deck system that is built flush with the bar top provided there is access for service and proper drainage. Always consult with a certified contractor on final design.
- Be sure to note any other considerations, such as aesthetics or privacy concerns, that may affect the safety or enjoyment of using the exercise system.

OUTDOOR CONSIDERATIONS

- Local electrical and plumbing codes.
- Consider local codes pertaining to fencing, enclosures, walls, electrical and plumbing. You will need to ensure that your exercise system is an adequate distance from power lines, both above ground and underground. Your exercise system will also need to be child proofed.
- View from house for aesthetics and supervisory needs.
- Distance from house for wintertime soaking.
- Nighttime lighting.
- Consider sunlight exposure, views, access, property lines, lighting, wind direction, shielding, septic tanks, plants, and trees when determining your location. Chemicals in the exercise system water may splash damaging nearby plant life.
- Area for placement of support equipment where adequate space will be needed to gain access to components for maintenance and general servicing.
- Be sure to note any other considerations, such as aesthetics or privacy concerns, that may affect the safety or enjoyment of using the exercise system.
- Provide adequate drainage away from the equipment and adequate elevation to allow draining by siphon, if should be required.

ELECTRICAL REQUIREMENTS

1. The exercise system should have access to a power source capable of supplying 220-240 volts AC.
2. It must be wired directly into a grounded circuit with a RCD. No other appliances should be on the same circuit.
3. Location of electrical supply 220-240 / 380-415 volt systems require hard wire installed from the main electrical source, to the sub panel, then to the exercise system terminal block. All equipment must be RCD protected (NOT SUPPLIED). All electrical wiring must comply with the national electric code.
4. Locations at least 1.5 m (5 feet) from all metal surfaces. An exercise system may be installed within 1.5 m (5 feet) of metals surfaces providing each metal surface is permanently connected by a no. 10mm² copper conductor attached to the bonding wire connector on the heater provided for this purpose. All installations must comply with your national electric codes.

DECK INSTALLATION

To be certain your deck can support your system you must know the deck's maximum load capacity. **Consult a qualified building contractor or structural engineer before you place the system on an elevated deck.** To find the weight of your system, its contents and occupants, refer to the System Specification chart. This weight per square meter must not exceed the structure's rated capacity, or serious structural damage could result.

DELIVERY ACCESS

It may be necessary to remove a gate, part of a fence, or other movable obstructions in order to move the system to its installation site. Your site will determine what equipment is necessary to move your system to its final location. A roll back truck with a tilt bed is a good option if your site can be accessed by an across road vehicle. When a small reach is needed for the final placement of your system, a boom truck is ideal. A telehandler vehicle can off load, traverse property and place your system in a more challenging situation or terrain. When access to your site is limited a crane may be used to lift your system over obstructions for precise placement.

The exercise system delivery personnel will supervise the crane delivery and complete the system installation.

NOTE: If your system delivery requires the use of a crane, you may be required to pay for its services at the completion of the delivery.

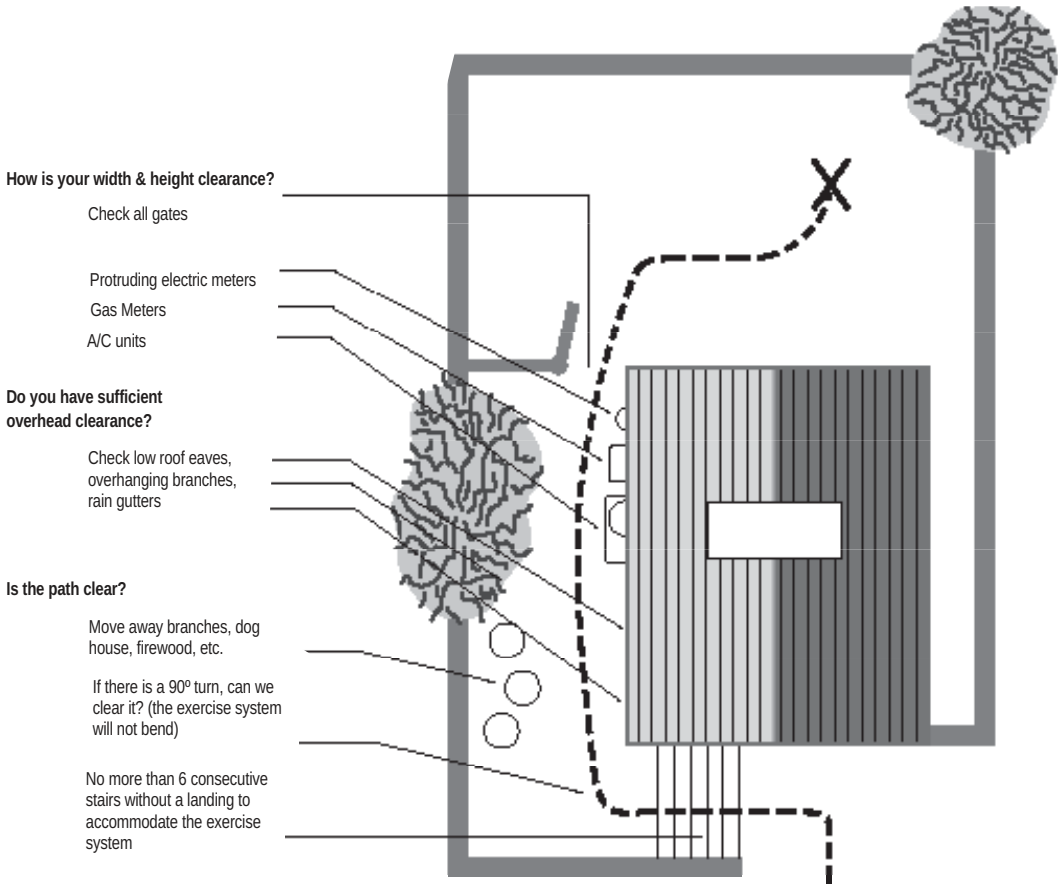

X2000 MODEL

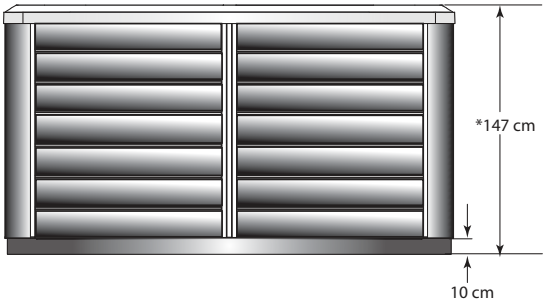

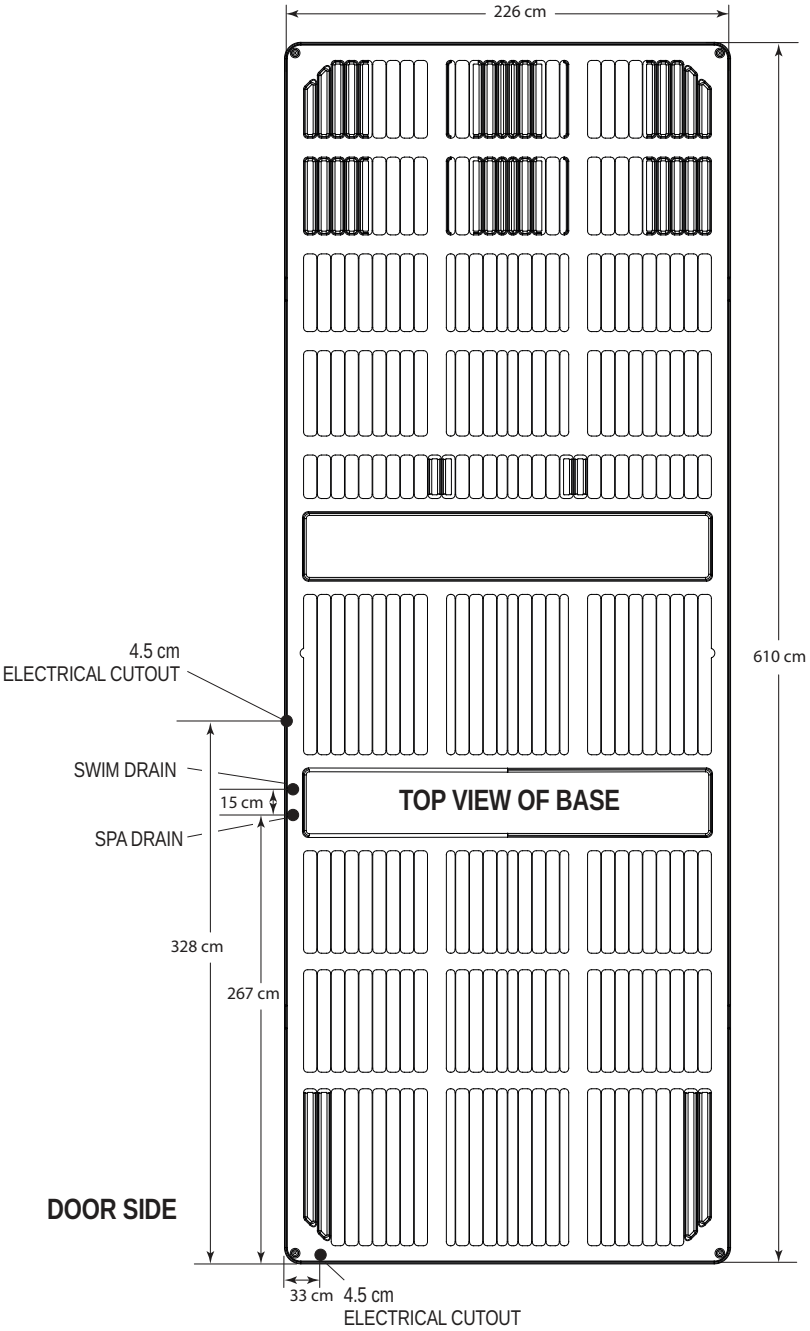

NOTE: ENDLESS POOLS requires that the X2000 Model be installed on a minimum 15 cm (6") thick reinforced concrete pad or structurally sound deck able to support the "dead weight" found in the specification chart on the back page.

WARNING: The X2000 Model must not be shimmed in any manner.

ELECTRICAL REQUIREMENTS

IMPORTANT: Fill the exercise system with water before turning on the power.

Your **SWIMCROSS** exercise system has been carefully designed to give you maximum safety against electrical shock. Connecting the exercise system to an improperly wired circuit will negate many of the exercise system's safety features. Improper wiring may also cause electrocution, risk of fire, and other risks of injuries. Please read and follow the electrical installation requirements and instructions completely!

SINGLE PHASE WIRING

220-240 VOLT PERMANENTLY CONNECTED

SWIMCROSS exercise systems must be wired in accordance with all applicable local electrical codes. All electrical work should be done by an experienced, licensed electrician. We recommend the use of appropriate electrical conduit, fittings, and wire for all circuits.

The diagram below illustrates how to wire the exercise system model:

- The exercise system requires an electrical service using two RCD breakers.
- Disconnect switches with at least 3 mm separation between contacts must be used for all electrical circuits to the exercise system.
- Mount the subpanel in the vicinity of the exercise system, but not closer than 1.5 m (5 feet) away. Your exercise system, must be supplied by a residual current device (RCD) - with a tripping rating not exceeding 30 mA in an electrical subpanel.
- Open exercise system by removing the 4 screws holding the vertical T-spacer to the left of the equipment compartment (see Door Panel Removal and Replace Instruction on the following page).
- Insert power wires into exercise system from either side towards the bottom, you will find a plastic cap attached to wall.
- Once your exercise system has been filled with water, turn it on and test all of the circuit breakers.

IMPORTANT: If breaker immediately trips, verify that the wires are correctly connected. Breaker should be tested prior to each use. Here's how:

1. Push the "TEST" button on each residual current device (RCD), and observe it click OFF.
2. Wait 30 seconds, then push the breaker switch to the OFF (down) position (to ensure that it has completely disengaged), then push the breaker switch to the ON (up) position. If you don't wait 30 seconds, the exercise system's power indicator may continue to blink – try again.

If any of the RCD breakers fail to operate in this manner, your exercise system may have an electrical malfunction, and you may be at risk of electrical shock. Turn off all circuits and do not use the exercise system until the problem has been corrected by an authorized service agent.

⚠ **WARNING:** Removing, or bypassing any RCD breaker will result in an unsafe exercise system and will void the warranty.

IMPORTANT: If you ever need to move or relocate your **SWIMCROSS** exercise system, it is essential that you understand and apply these installation requirements. Your **SWIMCROSS** exercise system has been carefully engineered to provide maximum safety against electric shock. Remember, connecting the exercise system to an improperly wired circuit will negate many of its safety features.

NOTE: Long wiring runs may require larger-gauge wire than stated.

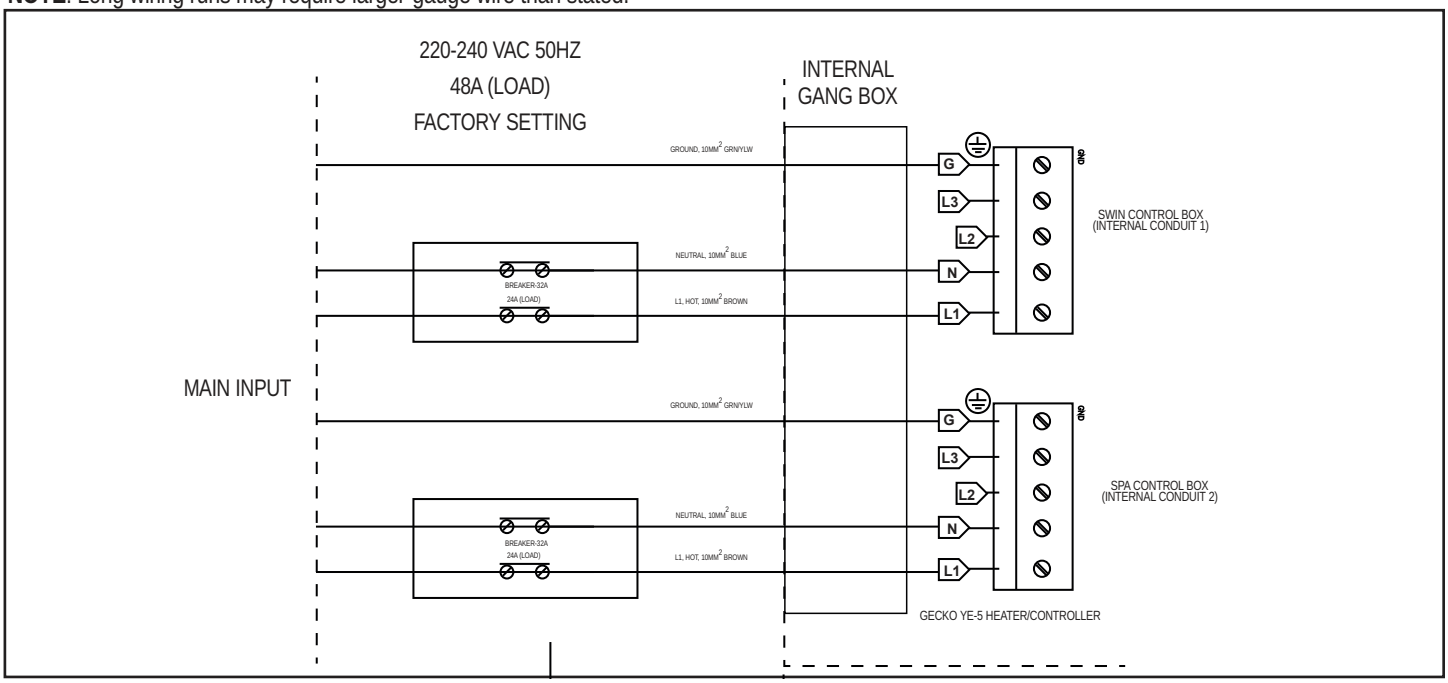

USE COPPER CONDUCTORS ONLY. **USE SUPPLY WIRES SUITABLE FOR 75°C/167°F.** **DISCONNECT ALL SUPPLY CONNECTIONS BEFORE SERVICING.** **CONNECT ONLY TO A CIRCUIT PROTECTED BY AN RCD**	**THESE EXERCISE SYSTEMS ARE INTENDED FOR USE WITH RCD BREAKERS.** **INCORRECT WIRING WILL DAMAGE CIRCUIT BOARDS.**

EQUIPMENT COMPARTMENT

The illustrations below are to be used as a reference only (your exercise system may look different). The equipment compartment is located below and to the right of the control panels (spa side of the exercise system).

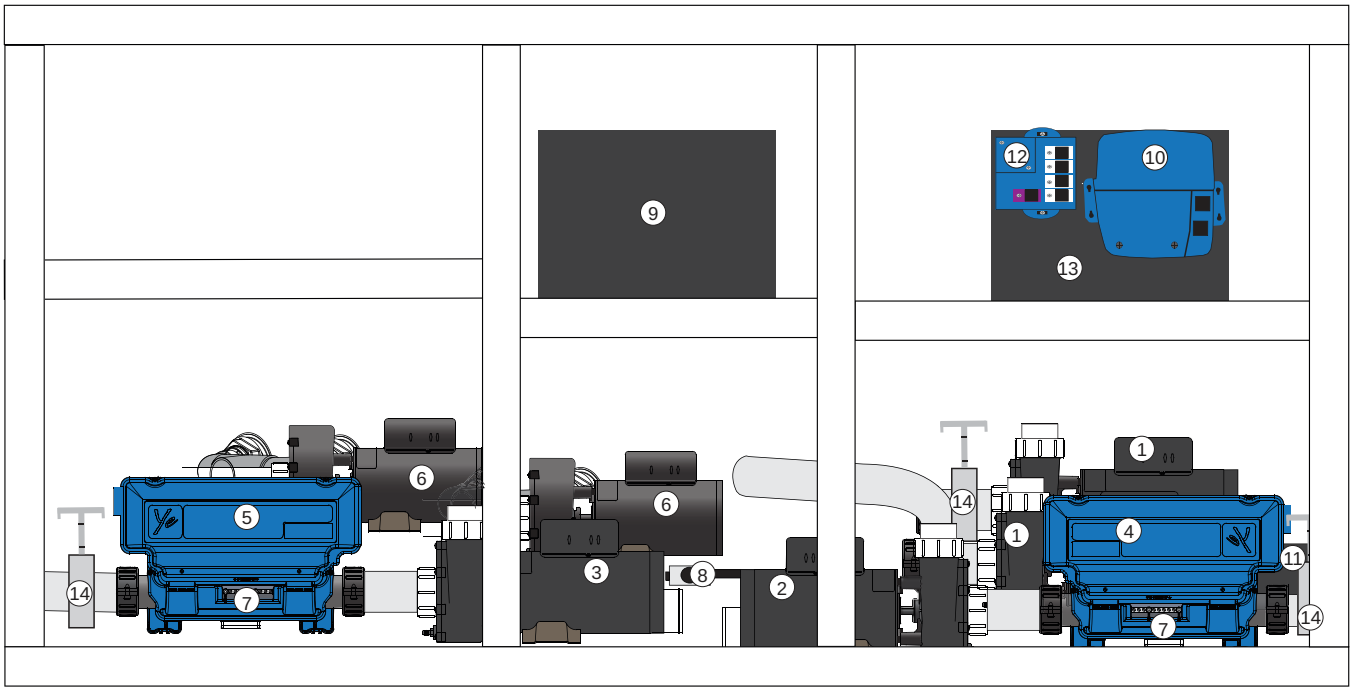

1. Hydromassage Jets Pump
2. Circulation Pump Spa Side
3. Circulation Pump Swim Side
4. Control Box & Heater Spa Side
5. Control Box & Heater Swim Side
6. Swim Side Jet Pump
7. Bonding Terminal
8. Gang Box
9. Ozone Ready (Mounting Location) Swim Side
10. Bluetooth Music (optional)
11. Subwoofer (optional)
12. Wi-Fi (optional)(2x)
13. Ozone Ready (Mounting Location) Spa Side
14. Isolation Valve

DOOR PANEL REMOVE & REPLACE

REMOVE

1. Locate the vertical T-spacer to the left of the equipment compartment (back, control panel side of exercise system).
2. Remove the 4 screws (using an 8 mm (5/16") socket) holding the T-spacer then remove the T-spacer. Loosen the 4 screws on the right side corner spacer but do not remove.
3. Lift panel and slide left until panel is no longer behind corner.
4. While holding panel, first pull panel up then pull bottom away from **SWIMCROSS** exercise system, lower panel and remove.
5. To remove left equipment compartment panel, first loosen and remove the nut holding each drain onto the panel. Slide panel slightly to the right so panel is no longer behind left T-space then repeat step 4 above.

REPLACE

1. Raise panel making sure it goes behind the bar top and rest on bottom frame.
2. Slide left panel to the left behind T-spacer and right panel to the right behind corner.
3. Align drains into left panel holes and attach to panel using the nuts removed in step 5 above.
4. Attach T-spacer back in place using 4 screws and tighten the 4 screws on the right corner to complete the installation.

GETTING STARTED

MAIN EXERCISE SYSTEM FEATURES

Your exercise system may look slightly different than the illustration

1) Two **control panels** are used to provide a quick visual check of the exercise system's status and allows the user to set different functions in both the swim and spa sides.

2) The **Air Valve** allows you to add air to your spa side hydromassage jets.

3) Spa side **Water Feature Levers** adjust the amount of water that flows from the water features. Jet pump 1 must be on for water feature to work.

4) Swim side **Water Feature Levers** adjust the amount of water that flows from the water features.

5) The **Diverter Valve** allows you to change the amount of water flowing through either the Swim jets or River jet.

6) The **Swim** jets provide a strong flow of water creating a current to swim against.

7) The **River** jets provide an adjustable strong flow of water creating a current to swim against.

8) The **Large Hydromassage** jets provide a unique, pulsating massage on the spa side.

9) The **Midsize Directional Hydromassage** jets, with eyeball nozzles, deliver a direct, more focused massage on the spa side.

10) The **Midsize Rotational Hydromassage** jets, provide a rotating massage on the spa side.

11) The **Mini Hydromassage** jets feature a direct more focused massage on the spa side.

12) Pillow (spa side)

13) Filter Compartment (swim side)

ADDITIONAL EXERCISE SYSTEM FEATURES

14) Swim Side Speaker (Optional)
15) Spa Side Speaker (Optional)
16) Suction Screen
17) Water feature
18) Heater Jet
19) Grab Rails
20) Filter Compartment (spa side)
21) Points of Light
22) Exercise Anchor
23) Tether Anchor

HYDROMASSAGE JETS

LARGE HYDROMASSAGE JETS - This jet provides a unique, pulsating massage. The water flow is adjustable in that it can be turned from low to high (by rotating the jet faceplate ¼ turn).

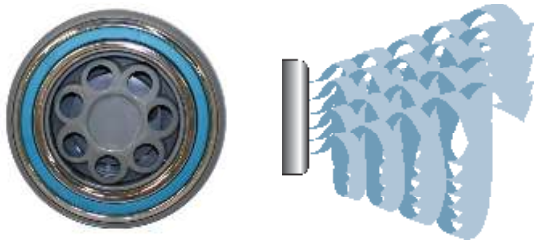

MIDSIZE DIRECTIONAL JET - These jets allow you to redirect the jet stream by changing the position of the nozzle. The water flow is adjustable in that it can be turned from low to high (by rotating the jet faceplate ¼ turn).

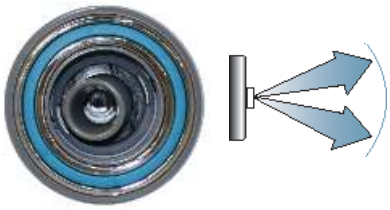

MIDSIZE ROTATIONAL JET - These jets provide a rotating massage pattern. The water flow is adjustable in that it can be turned from low to high (by rotating the jet faceplate ¼ turn).

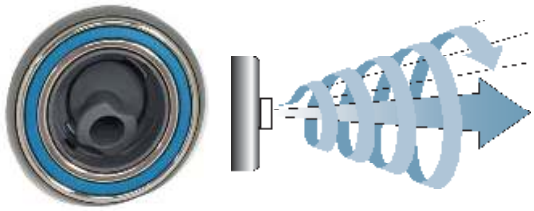

MINI JET - These jets deliver a direct, more focused massage. The water flow is adjustable in that it can be turned from low to high (by rotating the jet faceplate ¼ turn).

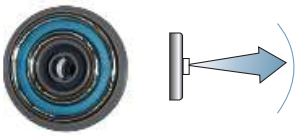

SWIM JETS

SWIM JET - The Swim Jet provides a powerful stream of water used to simulate a water current that is adjustable by using the left diverter valve.

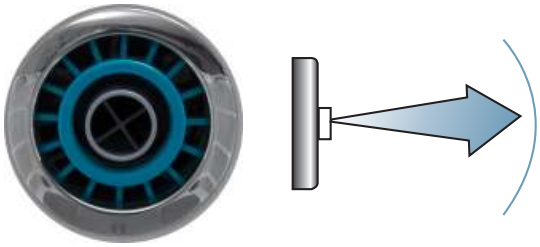

RIVER JET - Raise or lower the River jet nozzle to simulate a water current at or below your body during your swim. Rotate the right diverter valve to change the strength of the water flow coming out of the jet.

WATERFALL VALVE

Your exercise system is equipped with three waterfalls, two in the swim side and one in the spa side. The left illustrated valve is used in the swim side. The flow is regulated by turning the waterfall valves in either direction.
Jet pump 1 must be on for waterfall to run on spa side.

AIR CONTROLS

Your exercise system is equipped with two air valves. The air valves will add or remove air to the hydromassage jet system. Rotate valve to see which hydromassage jets are affected.

DIVERTER VALVE

Your exercise system is equipped with two diverter valves. The left side regulates the amount of water flow going through the Swim Jets while the right side regulates the amount of water flowing through the River jet. Turn to + for more flow or - for less flow.

QUICK START-UP INSTRUCTIONS

BEFORE YOU FILL YOUR EXERCISE SYSTEM

Make sure your exercise system has been properly installed per all local codes, including the location of the exercise system, the foundation of the exercise system, as well as the electrical installation of the exercise system.

DO:

- Know which water treatment system you will be using and make sure you have necessary chemicals available. Read all of the instructions that come with the system.
- Have 5-way Test Strips Available.
- Have pH/Alkalinity Up & Down available.
- Know the Hardness of your water, contact your dealer to help you with this information. See Water Quality and Maintenance for more information.
- Purchase the Clean Screen™ pre-filter to remove unwanted contaminants from the tap water. This is recommended, not required.

START-UP

Your **SWIMCROSS** exercise system has been thoroughly tested during the manufacturing process to ensure reliability and long-term customer satisfaction. A small amount of water may have remained in the plumbing after testing and, as a result, may have spotted the exercise system shell or the exercise system siding prior to delivery. Before filling the exercise system, wipe the exercise system shell clean with a soft rag. The following instructions must be read and followed exactly to ensure a successful start-up or refill.

CAUTIONS

- **DO NOT CONNECT POWER TO AN EMPTY EXERCISE SYSTEM.** Power to the exercise system automatically activates critical components within the exercise system, such as controls, heaters, and other systems. If power is supplied to these components prior to both swim side and spa side being filled, the components will be damaged, and this may result in a non-warranty component failure.
- **DO NOT** use your exercise system after filling until all of the steps listed below are completed.
- **DO NOT** add chlorine if treating your exercise system with polyhexamethylene biguanide (Biguanide, PHMB, eg. BaquaSpa®) sanitizer.
- **DO NOT** use a salt-generated chlorine system, this will damage components and is not covered under your warranty.
- Before filling your exercise system for the first time, remove the equipment compartment door and check to ensure that the unions on either side of the pump(s) and heater are hand-tight and the slide valves are open.

1. **CLOSE DRAIN, remove the filter compartment grill skimmer tray and one filter (pg. 25).**

a. Fill your swim side through the filter compartment using the CleanScreen™ pre-filter (optional from dealer) that attaches to your garden hose. The water level of your swim side should be maintained at a level 15 cm (6") below the top of the **SWIMCROSS** Exercise System. Reinstall the filter, skimmer tray, and grill once the swim side is filled.

b. Fill your spa side through the filter compartment (lift filter basket up and out first) using the **CLEANSCREEN** pre-filter (optional from dealer) that attaches to your garden hose. The water level of your spa side should be maintained at 2.5 cm (1") above the highest jet. **IMPORTANT:** *Watkins Wellness does not recommend that the exercise system be filled with "softened" water, as this may damage the exercise system's equipment.*

2. **AFTER THE EXERCISE SYSTEM HAS BEEN FILLED** with water and the equipment compartment door is secured, power must be applied to the exercise system.
   - FIRST activate power to the subpanel from the main house panel.
   - NEXT open the door of the electrical subpanel and reset the RCD breakers.
   - FINALLY, close and secure the subpanel door.
3. **TO CHECK THE OPERATION OF THE HYDROMASSAGE JET SYSTEM IN SPA** and to purge any remaining air from the system complete the following steps:
   - Press the jets buttons on spa side control panel placing all hydromassage jets on.
   - Once the jet system is fully operational (as indicated by strong, non-surging jets), priming of the spa side is complete.
   - To turn off the jets, press the jets button on the spa side control panel.
   - If you do not feel a steady stream of water from your jets, refer to the instructions for priming the pump in the exercise system TROUBLESHOOTING section.
4. **TO CHECK THE OPERATION OF THE SWIM JET SYSTEM** and to purge any remaining air from the system complete the following steps:
   - Press the jets buttons on spa side control panel placing all swim jets on.
   - Once the jet system is fully operational (as indicated by strong, non-surging jets), priming of the spa side is complete.
   - To turn off the jets, press the jets button on the spa side control panel.
   - If you do not feel a steady stream of water from your jets, refer to the instructions for priming the pump in the exercise system TROUBLESHOOTING section.
5. **SET THE TEMPERATURE CONTROL** to the desired temperature between 15°C (59°F) and 40°C (104°F) on both the swim side and the spa side control panels, then place the exercise system cover on the exercise system and allow the water temperature to stabilize approximately 0.5°C (1°F) per hour. Make sure you secure the cover in place. Periodically check the exercise system water temperature. When the water temperature reaches desired temperature, proceed to the next step. The exercise system temperature is pre-programmed to reach 29.5°C (85°F) on the swim side and 38.0°C (100°F) on the spa side. You may change the water temperature by pressing the ▲ button on each control panel to raise the temperature, or lower temperature by pressing the ▼ button.
6. **USING A TEST STRIP AND APPLICABLE CHEMICALS** adjust Total Alkalinity (TA) to 80-120 ppm, Calcium Hardness (CH) to 75 - 150 ppm, then exercise system water pH to between 7.2 and 7.8. These procedures are listed in the "Water Quality and Maintenance" section.

   OPERATION NOTE: *Adjusting the Total Alkalinity as the first step is important, as out-of balance TA will affect your ability to adjust the pH correctly and will prevent the sanitizer from operating effectively.*
7. **SUPERCHLORINATE THE EXERCISE SYSTEM WATER** by adding 1½ teaspoons of chlorine (sodium dichlor) per 950 liters (250 gallons) of water while running the swim jets at high speed for 10 minutes in the swim side. Disperse the chemicals in the swim area away from the walls. Add into filter area on the spa side while running both jets for 10 minutes.
8. **TEST THE EXERCISE SYSTEM WATER FOR CHLORINE RESIDUAL.** If the residual is between 1 and 5 ppm on the test strips, go on to the next step. If the residual is less than 1 ppm, activate the swim jets (on swim side) on high for another 10 minutes and add more chlorine as needed, or if needed activate the jets on the spa side and run both jets for 10 minutes.

WARNING: *High sanitizer levels can cause discomfort to the user's eyes, lungs and skin. Always allow the sanitizer level to fall to the recommended range before using the exercise system.*

9. **RECHECK** the Total Alkalinity (TA) 80-120 ppm, Calcium Hardness (CH) 50-150 ppm, and the pH must be between 7.2 and 7.8.

The exercise system is ready for use when the exercise system water has circulated and the bromine level remains between 1 and 2 ppm or chlorine level remains between 1 and 5 ppm.

Operating Instructions

The exercise system has two control panels, one controls the large swim side and the other controls the smaller spa side.

SWIM SIDE CONTROL PANEL

The swim side control panel provides a bright, full color display, and intuitive user experience, while its screen's high resolution brings exercise system user interfaces to a new level. Loaded with a large amount of memory and a powerful on-board processor creating seamless graphic interface that exercise system users have been waiting for.

SWIM SIDE CONTROL PANEL FUNCTIONS

When the screen is off, press any button to turn the control panel screen on and display the home screen. After 30 minutes of inactivity the screen will shut off.

The function description of the buttons below will only work from the Home screen. Once the swim side control panel is placed in a submenu the selection lights next to the buttons will light up to indicate which buttons may be selected for a specific screen function.

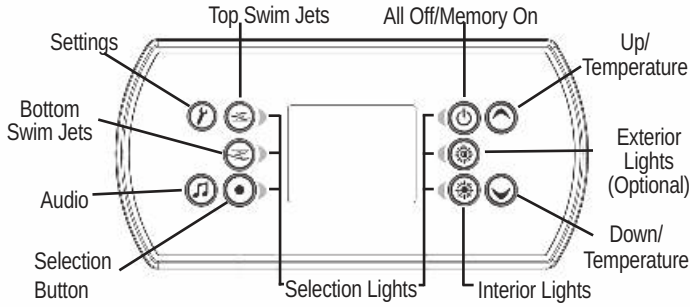

SETTINGS

One press of the (Settings button) from the home page gives you access to a menu to manage the settings of your exercise system where you will find:

- Water Care
- Audio (optional)
- Maintenance
- Date and Time
- Keypad Settings
- Miscellaneous
- Electrical Configuration
- About

Use the or buttons to move up and down in the list. To select an option, press the lit button beside the desired highlighted option.

IMPORTANT: At any point you can press the (Settings button) to return to the home screen or (top left button) to go back.

WATER CARE / HEATER SETTINGS

The Water Care section will help you set up your purge times and heater settings. Choose from Away from Home, Standard, Energy Savings, Super Energy Savings, and Weekender, depending on your needs.

Use (middle left) button to choose your setting. A green check mark will appear on the selected icon to confirm.

When in Economy mode, the heating set point will be reduced by 11°C (20°F), which means that the heating system will not come on during the set time unless the temperature falls 11°C (20°F) below the exercise system's set temperature.

The swim side uses a 24 hour circulation pump. Purge times can be set to turn each Swim jet pump on (back to back) for 1 minute at the designated purge time, additional purge times can also be inserted.

WATER CARE MODES

Away from home:

In this mode the swim side will always be in economy mode; the set point will be reduced by 11°C (20°F).

Standard:

The swim side will never be in economy mode.

Energy Savings:

The swim side will be in economy mode during the peak hours of the day and resume normal mode on the weekend.

Super Energy:

The swim side will always be in economy mode during peak hours, every day of the week.

Weekender:

The swim side will be in economy mode from Monday to Friday, and will run normally on the weekend.

Default Settings:

By selecting this setting you will be asked to confirm your choice. Doing so will revert all Water Care Modes back to factory settings.

MODIFYING SCHEDULES

To modify a Water Care category, use the (middle right) lit button, to open the selected Water Care menu. The menu screen is divided into two settings, Economy and Purge time with Economy being first. Set or change the Day, Start and Stop time if desired to keep the heater off (Economy mode). Scroll down to set or change the Purge Cycle Day and Start, the duration can not be changed.

You can add schedules by scrolling down to Add, and selecting by pressing the (middle left) lit button. To delete a highlighted schedule, press (top right) lit button.

You can modify the schedules by selecting (middle left) lit button and adjusting the schedule using the or buttons. Press (middle left) lit button to move between parameters.

You have several possibilities for the schedule (Mon-Fri, weekend, every day, or single days). The schedules will be repeated every week. Once you have set the schedule, use (top left) lit button to go back. Ensure that you have selected the desired Water Care option in the main Water Care menu.

MAINTENANCE

From the Settings page you can access the Maintenance menu, which gives you access to the following options:

- Maintenance reminders
- Standby

Use the or buttons to make a selection, and (middle left) lit button to select.

MAINTENANCE REMINDERS

The control panel will remind you of maintenance required in your swim area, like rinsing or cleaning the filter. Each task has its own duration, based on normal use.

The Maintenance reminders menu allows you to verify the time left before maintenance is required, as well as to reset the time once a task is completed.

Use the or buttons to move through the list.

To reset a task select it by pressing the (middle left) lit button, then confirm by pressing the lit button next to confirm when prompted. Once you have confirmed the task will be reset.

STANDBY

The Standby mode allows you to service your swim side. Pump will stop for 30 minutes, and automatically restart after this time. Press (middle left) lit button to activate Standby mode.

Once Standby mode has been activated a screen will appear to show that pumps are stopped. The normal page will return at the end of maintenance.

Press on the button next to cancel to leave Standby mode and restart the swim area.

DATE AND TIME

Here you can adjust the time format, change the year, date, and time. Use the or buttons to choose the setting that you want to adjust, and select it by pressing (middle left) lit button.

Use the or buttons to change the parameters, and (middle left) lit button to move between parameters. Press (top left) lit button to take you back to the main Settings menu.

KEYPAD SETTINGS

In this section, you can change the temperature unit, language, display orientation, rim control panel light color, and lock the control panel.

Use the or buttons to choose the setting that you want to adjust. Select it by pressing the (middle left) lit button then use the or buttons again to change the setting.

When you change the display orientation, the contextual options and or buttons adjust to the chosen orientation. The Audio and Setting buttons remain unchanged, as well as the jets and lights buttons in the home page.

Security settings allow you a Partial (Temperature) lock or Full (entire control panel) lock. Select Security screen by pressing the (middle left) lit button then use the or buttons to change to Full, Partial or Unlock. Press (top left) lit button to display an information screen telling you to press and hold button for 5 seconds to lock.

To unlock Full, press and hold button for 5 seconds.

MISCELLANEOUS

In this section, you can turn the Warm weather mode ON or OFF. When ON the circulation pump will shut OFF whenever the water temperature gets 1°C (2°F) above the set point. Because of the swim area's large body of water it is recommended to keep the Warm weather mode OFF.

Press the (middle left) lit button, then use the or buttons to change the Warm weather mode.

ELECTRICAL CONFIGURATION

Please do not make changes to this screen!

ABOUT

This section shows information about the control panel software number, and the revision numbers of the different components of your system.

AUDIO IN.STREAM 2 (OPTIONAL)

If your exercise system has the optional in.stream 2 Bluetooth w/subwoofer system. The following screens and functions will be available on the swim area control panel:

AUDIO

The swim side control panel is used with the in.stream 2 audio system. The Audio screen in the Settings menu gives you the option to disconnect your Bluetooth enabled device, adjust the Fader, Balance or Sub Woofer.

Use the ⌃ or ⌄ buttons to scroll to desired option, press (middle left) lit button to select the function. Press the ⌃ or ⌄ buttons to change parameters. Press (top left) lit button to take you back to the main Settings menu.

IN.STREAM 2 FUNCTIONS

Press the button in the home screen to access your audio system.

If you are using a device with Bluetooth technology, it must be connected for functions to work.

Please note that the Play/Pause and Change Track functions apply to devices using Bluetooth technology only, and will NOT work when AUX is selected as the source.

Turning power on/off

Press the (top right) lit button to start the audio on or off process.

Selecting the source

Press the (top left) lit button to select a source using Bluetooth wireless technology or AUX (aux is not available at time of publication). Selection will be indicated below In. stream 2.

Pairing Bluetooth

Audio Power must be on. Go to the Bluetooth settings on your device and find in.stream 2 and press to connect. Enter pin 5555 and press pair to sync your device. **NOTE:** Only one device at a time can be synced.

Play/Pause audio

Press the Play/Pause (middle right) lit button to start or pause the audio. Press (middle left) lit button to mute or enable sound.

Adjusting the volume

Press the ⌃ or ⌄ buttons to increase or decrease the volume illustrated by the slider bar.

Changing tracks

Use the Last Track and Next Track (lower left) lit button or (lower right) lit button to change tracks.

TEMPERATURE CONTROL

The set temperature range is from 15°C to 40°C (59°F to 104°F). (The water temperature of any exercise system may rise or lower slightly depending on the current use and condition of your exercise system and on outside temperatures.)

The set temperature of the swim side water will automatically be 29.5°C (85°F) the first time power is applied. This is the setting programmed at the factory. After the exercise system has been set up and used, the last temperature value set by the user will be stored in memory. If power is disconnected from the exercise system, it will automatically revert to the last set temperature when power is reapplied.

To display the set temperature of the exercise system:

Press the ⌃ or ⌄ buttons on the control panel in the home screen.

To increase the set temperature of the exercise system:

Press the ⌃ button in the home screen. The set point will appear in blue. After 3 seconds without any change to the set temperature value, the current water temperature will reappear in white.

To decrease the set temperature of the exercise system:

Press the ⌄ button in the home screen. The set point will appear in blue. After 3 seconds without any change to the set temperature value, the current water temperature will reappear in white.

JETS CONTROL

When pressed, the top two buttons on the left of the screen will activate the jets when in the home screen. If left running the low or high speed pumps will automatically turn off after 2 hours.

SWIM JETS - TOP 3 JETS

The **SWIMCROSS** Exercise System uses a 2.5 Horsepower single speed pump to power the top 3 swim jets.

Press jet button to activate the top row of jets (swim area) in high speed, you will see the jet 1 icon on the screen rotate fast.

Press jet button a second time to shut the top row of jets off.

SWIM JETS - RIVER JET

The **SWIMCROSS** Exercise System uses a 2.5 Horsepower single speed pump to power the bottom 2 swim jets.

Press jet button to turn the River jet in the swim area on, you will see the jet 2 icon on the screen rotate fast.

Press jet button a second time to shut the River jet off.

SWIM JETS SPEED OPTIONS

There are 3 different Swim Jet options that can be created as follows:

Speed Option	Top 3 Jets	River Jet
1	On	On
2	Off	On
3	On	Off

LIGHT CONTROL

All exercise systems are equipped with an internal lighting system. This system includes interior points of lights located throughout the swim side.

Press the (lower right) button (when in the home screen) to activate all interior swim side lights and left light icon. Press a second time to shut all interior swim side lights and left icon light off, when turning back on after several seconds the same light mode will appear.

Every time the light is turned off and on quickly a new light mode will appear.

The sequence is as follows: White, Aqua, Magenta, Azure, Amber, Emerald, Ruby, color wheel with abrupt color changes, slow full color wheel and fast full color wheel.

NOTE: If left on, the lights will automatically turn off after 4 hours of operation.WI-FI In.touch (optional)

EXTERNAL LIGHTS (OPTIONAL)

Press the (middle right) button (when in the home screen) to activate the external lights and right light icon. Press a second time to turn off.

WI-FI IN.TOUCH 3 (OPTIONAL)

If your swim side is equipped with the Wi-Fi in.touch 3 module you will be able to use the internet or your home Wi-Fi network to control you swim side by downloading an App to your favorite devices.

See Wi-Fi in the spa side Settings section to connect your swim side to your home Wi-Fi network.

For more instructions go to: https://geckoalliance.com/wp-content/uploads/2024/11/9919-101890_Techbook_in.touch-3_3plus_EN_VF.pdf and find the in.touch 3 TechBook or scan the QR code to the right.

PURGE CYCLES

When your exercise system is first powered up, the default purge cycle is set to start at 12:00 pm turning each swim jet pump on for 1 minute using the Standard Water Care mode. Unless you set the time using the control panel (see Date & Time under Settings) the exercise system purge cycle will start at power up and repeat every 12 hours.

We recommend setting your date and time first, then going to the Water Care section and making any desired changes for days and purge start times in the desired Water Care Mode.

The purge cycle will activate one swim jet pump for 1 minute followed by the second swim jet pump for an additional 1 minute.

NOTE: Power interruption of the exercise system will not change the purge cycle settings when power is regained.

PURGE CYCLE SUSPENSION:

The purge cycle will be suspended every time a jet pump or light is activated manually during the purge cycle time. The suspension will end 10 minutes after the completion of the manual use.

ALL OFF / MEMORY ON

Press the (top right) button when in the home screen to turn the lights and any jets that are on OFF.

If you press this button again before pressing the light or jets button it will bring up the last settings before shutting off.

NOTE: The color of the lights will however advance to the next sequence.

SPA SIDE CONTROL PANEL

The spa side control panel provides a bright, full color display, and intuitive user experience, while its screen's high resolution brings exercise system user interfaces to a new level. Loaded with a large amount of memory and a powerful on-board processor creating seamless graphic interface that exercise system users have been waiting for.

SPA SIDE CONTROL PANEL FUNCTIONS

When the screen is off, press any button to turn the spa side control panel screen on and display the home screen. After 30 minutes of inactivity the screen will shut off.
The function description of the buttons below will only work from the Home screen. Once the swim side control panel is placed in a submenu the selection lights next to the buttons will light up to indicate which buttons may be selected for a specific screen function.

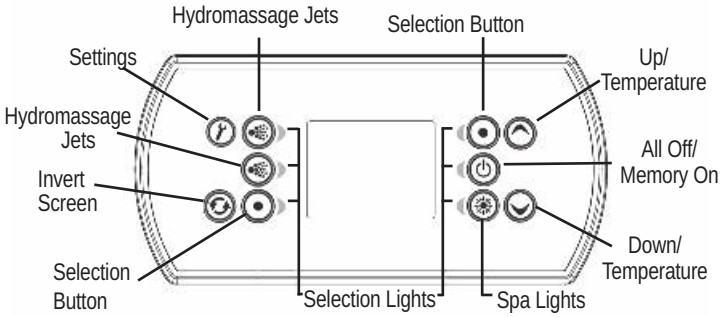

SETTINGS

One press of the (Settings button) from the home page gives you access to a menu to manage the settings of your exercise system where you will find:

- Water care
- Maintenance
- Date and time
- Keypad Settings
- Miscellaneous
- Wi-Fi (optional)
- Electrical configuration
- About

Use the or buttons to move up and down in the list. To select an option, press the lit button beside the desired highlighted option.

IMPORTANT: At any point you can press the (Settings button) to return to the home screen or top left button (hydromassage jets) to go back.

WATER CARE

The Water Care section will help you set up your ideal filtration and heating settings. Choose from Away from Home, Standard, Energy Savings, Super Energy Savings, and Weekender, depending on your needs.

Use (middle left) button to choose your setting. A green check mark will appear on the selected icon to confirm.

When in Economy mode, the heating set point will be reduced by 11°C (20°F), which means that the heating system will not come on during the set time unless the temperature falls 11°C (20°F) below the set temperature.

The filtration schedule shown on the screen will apply to the spa side circulation pump.

WATER CARE MODES

Away from home:

In this mode the spa side will always be in economy mode; the set point will be reduced by 11°C (20°F).

Standard:

The System will never be in economy mode and will be filtering according to the pack's low level configuration.

Energy Savings:

The spa side will be in economy mode during the peak hours of the day and resume normal mode on the weekend.

Super Energy:

The spa side will always be in economy mode during peak hours, every day of the week.

Weekender:

The spa side will be in economy mode from Monday to Friday, and will run normally on the weekend.

Default Settings:

By selecting this setting you will be asked to confirm your choice. Doing so will revert all Water Care Modes back to factory settings.

MODIFYING SCHEDULES

To modify a Water Care category, use the (middle right) lit button, to open the selected Water Care menu. The menu screen is divided into two settings, Economy and Filter cycle with Economy being first. Set or change the Day, Start and Stop time if desired to keep the heater off (Economy mode). Scroll down to set or change the Filter cycle Day, Start and Duration.

You can add schedules by scrolling down to Add, and selecting by using the (middle left) lit button.

To delete a highlighted schedule, press (top right) lit button.

You can modify the schedules by selecting (middle left) lit button and adjusting the schedule using the or buttons. Press (middle left) lit button to move between parameters.

You have several possibilities for the schedule (Mon-Fri, weekend, every day, or single days). The schedules will be repeated every week. Once you have set the schedule, use (top left) lit button to go back. Ensure that you have selected the desired Water Care option in the main Water Care menu.

MAINTENANCE

From the Settings page you can access the Maintenance menu, which gives you access to the following options:

- Maintenance reminders
- Standby

Use the or buttons to make a selection, and (middle left) lit button to select.

MAINTENANCE REMINDERS

The control panel will remind you of maintenance required on the spa side, like rinsing or cleaning the filter. Each task has its own duration, based on normal use.

The Maintenance reminders menu allows you to verify the time left before maintenance is required, as well as to reset the time once a task is completed.

Use the or buttons to move through the list.

To reset a task select it by pressing the (middle left) lit button, then confirm by pressing the lit button next to confirm when prompted. Once you have confirmed the task will be reset.

STANDBY

The Standby mode allows you to service the spa side. Pumps will stop for 30 minutes, and automatically restart after this time. Press (middle left) lit button to activate Standby mode.

Once Standby mode has been activated a screen will appear to show that pumps are stopped. The normal page will return at the end of maintenance.

Press on the button next to cancel to leave Standby mode and restart the spa side.

DATE AND TIME

Here you can adjust the time format, change the year, date, and time. Use the or buttons to choose the setting that you want to adjust, and select it by pressing (middle left) lit button.

Use the or buttons to change the parameters, and (middle left) lit button to move between parameters. Press (top left) lit button to take you back to the main Settings menu.

KEYPAD SETTINGS

In this section, you can change the temperature unit, language, display orientation, rim control panel light color, and lock the control panel.

Use the or buttons to choose the setting that you want to adjust. Select it by pressing the (middle left) lit button then use the or buttons again to change the setting.

When you change the display orientation, the contextual options and or buttons adjust to the chosen orientation. The Invert screen and Setting buttons remain unchanged, as well as the jets and lights buttons in the home page.

Security settings allow you a Partial (Temperature) lock or Full (entire control panel) lock. Select Security screen by pressing the (middle left) lit button then use the or buttons to change to Full, Partial or Unlock. Press (top left) lit button to display an information screen telling you to press and hold (top left) button for 5 seconds to lock.

To unlock Full, press and hold (top left) button for 5 seconds.

MISCELLANEOUS

In this section, you can turn the Warm weather mode ON or OFF. When ON the circulation pump will shut OFF whenever the water temperature gets 1°C (2°F) above the set point.

Press the (middle left) lit button, then use the or buttons to change the Warm weather mode.

ELECTRICAL CONFIGURATION

Please do not make changes to this screen!

ABOUT

This section shows information about the control panel software number, and the revision numbers of the different components of your system.

WI-FI (OPTIONAL)

This menu allows you to connect your in.touch module to a Wi-Fi network or to change its network. This menu is only visible when the in.touch module is installed.

To connect your in.touch module to a wireless network, use the or buttons to go to the Wi-Fi option in the Settings menu and (middle left) lit button to select it.

After a few seconds the available networks will appear on the screen, as well as their signal strength.

Use the or buttons to move through the list. Select your network by pressing the middle left button .

If the Wi-Fi network is password protected enter it when prompted.

- Use the or buttons to choose your letters.
- Use (lower right) lit button to move the curser forward.
- Use (top right) lit button to change the type of character.

(uppercase, lowercase, number, symbol).

- Use (lower left) lit button to backspace.
- Use (middle left) lit button to confirm.

If no password is required the in.touch will connect automatically.

Once the in.touch module is connected to a Wi-Fi network a green check mark will appear in the Wi-Fi menu, and the network name will appear in the Settings menu.

INVERT SCREEN

Press the (lower left) button to invert screen.

When you change the display orientation, the contextual options and or buttons adjust to the chosen orientation. The Setting buttons remain unchanged, as well as the jets and lights buttons in the home page.

TEMPERATURE CONTROL

The set temperature range is from 15°C to 40°C (59°F to 104°F). (The water temperature of the spa side may rise or lower slightly depending on the current use and condition of your exercise system and on outside temperatures.)

The set temperature of the spa side water will automatically be 38.0°C (100°F) the first time power is applied. This is the setting programmed at the factory. After the spa side has been set up and used, the last temperature value set by the user will be stored in memory. If power is disconnected from the exercise system, it will automatically revert to the last set temperature when power is reapplied.

To display the set temperature of the spa side:

Press the or buttons on the control panel in the home screen.

To increase the set temperature of the spa side:

Press the button in the home screen. The set point will appear in blue. After 3 seconds without any change to the set temperature value, the current water temperature will reappear in white.

To decrease the set temperature of the spa side:

Press the button in the home screen. The set point will appear in blue. After 3 seconds without any change to the set temperature value, the current water temperature will reappear in white.

JETS CONTROL

When pressed, the top and middle button on the left side of the screen will activate the jets when in the home screen. If left running, the pumps will automatically turn off after 2 hours.

HYDROMASSAGE JETS

Turn the hydromassage jet pumps On to activate the hydromassage jets on the spa side as well as the spa side waterfall if the waterfall valve is open and jet 1 is on.

Press (Top left) jet button to activate some of the hydromassage jets, you will see the jet 1 icon on the screen rotate.

Press (Top left) jet button a second time to shut the hydromassage jets off.

Press (middle left) jet button to activate the hydromassage jets that were not activate by jet 1, you will see the jet 2 icon on the screen rotate.

Press (middle left) jet button a second time to shut the hydromassage jets off.

LIGHT CONTROL

All exercise systems are equipped with a lighting system. This system includes interior points of lights located throughout the spa side.

Press the (lower right) button (when in the home screen) to activate all interior spa side lights and the light icon. Press a second time to shut all interior spa side lights and icon light off, when turning back on after several seconds the same light mode will appear.

Every time the light is turned off and on quickly a new light mode will appear.

The sequence is as follows: White, Aqua, Magenta, Azure, Amber, Emerald, Ruby, color wheel with abrupt color changes, slow full color wheel and fast full color wheel.

NOTE: If left on, the lights will automatically turn off after 4 hours of operation.

FILTER CYCLES

When your spa side is first powered up, the default filter cycle is set to start at 12:00 pm and 12:00 am and will run for 1 hour each day using the Standard Water Care Mode. Unless you set the time using the control panel (see Date & Time under Settings) the spa side filter cycle will start at power up and run for 1 hour and repeat every 12 hours.

We recommend setting your date and time first, then going to the Water Care section and making any desired changes for days, start times and length of time in the desired Water Care Mode.

The spa side filter cycle will activate the circulation pump for the entire cycle that has been programmed.

NOTE: Power interruption of the spa side will not change the filter cycle settings when power is regained.

At the beginning of each filter cycle all jets on spa side will first run on high speed for 1 minute (purge cycle) back to back.

FILTER CYCLE SUSPENSION:

The filter cycle will be suspended every time a jet pump or light is activated manually during the filter cycle time. The suspension will end 10 minutes after the completion of the manual use.

POLLING

Polling is necessary for your hot tub to maintain the proper set temperature. The temperature probe located inside the heating tube requires water from the hot tub to pass through it, this is done by automatically turning on your filtration pump for approximately 2 minutes. Outside temperatures will determine how often the pump is turned on, this can range anywhere from 15 to 90 minute intervals.

ALL OFF / MEMORY ON

Press the (middle right) button when in the home screen to turn the lights and any jets that are on OFF.

If you press this button again before pressing the light or jets button it will bring up the last settings before shutting off.

WI-FI IN.TOUCH 3 (OPTIONAL)

If your spa side is equipped with the Wi-Fi in.touch 3 module you will be able to use the internet or your home Wi-Fi network to control you spa side by downloading an App to your favorite devices.

See Wi-Fi in the Settings section to connect your spa side to your home Wi-Fi network.

For more instructions go to: https://geckoalliance.com/wp-content/uploads/2024/11/9919-101890_Techbook_in.touch-3_3plus_EN_VF.pdf and find the in.touch 3 TechBook or scan the QR code to the right.

SMART WINTER MODE

The Smart Winter Mode (SWM) is used to prevent water from freezing in the plumbing lines. As soon as there is a risk of freezing, this protection automatically kicks in. The SWM protection will turn back off only after 24 hours without a risk of freezing. During the SWM period, the Smart Winter Mode icon remains on; the icon blinks when the purge is active. The purge period indicates the amount of time between the purging of the plumbing lines based on the temperature behind the panels.

WATER QUALITY AND MAINTENANCE

BASIC INFORMATION

It's important to have clean water. Water maintenance is one of the least understood, yet most important areas of exercise system ownership. Your dealer can guide you through the process of achieving and maintaining balanced water in your exercise system, given your local conditions.

IMPORTANT: Water Terminology can be found at the end of this section.

- **Always read & refer to the owner's manual** for complete information.
- **Test your water** with a test strip once a week, or each time the exercise system is used on either the swim side or spa side.
- **Add chemicals** in frequent, small amounts to prevent overdosing the exercise system.
- **Use the exercise system only** when the chlorine level is between 1-5 ppm or manually add chlorine as needed.
- **It is the exercise system owner's responsibility** to prevent over or under chlorination.

IMPORTANT: It is recommended at a minimum to change 50% of your swim side water every year however, it is dependent on the amount of usage. Drain & refill spa water 2-4 times per year depending on how often you use your spa, and how many people use it. Check with your **ENDLESS POOLS** dealer to determine if water in your region has unique qualities - such as high metal or mineral content - that should be addressed.

WATER QUALITY CHART

PARAMETER	TARGET	MIN - "OK" RANGE - MAX	
pH	7.4	7.2	7.8
ALKALINITY	100 ppm	80 ppm	120 ppm
HARDNESS	100 ppm	75 ppm	150 ppm
CHLORINE	3 ppm	1 ppm	5 ppm

Maintaining the water quality and the cleanliness of the filters in your exercise system is your responsibility. Keeping the exercise system water balanced prolongs the life of the components and will make the water more comfortable. Your program will depend on your water's mineral content, how often you use your exercise system, and how many people use it. Watkins Wellness has developed several water care systems and products to simplify water care which are available from authorized **ENDLESS POOLS** dealers.

CHEMICAL SAFETY

When using chemicals, read the labels carefully and follow directions precisely. Though chemicals protect you and your exercise system when used correctly, they can be hazardous in concentrated form. Always observe the following guidelines:

- Allow only a responsible person to handle exercise system chemicals. Keep them out of the reach of children.
- Accurately measure the exact quantities specified, never more. Do not overdose your exercise system.
- Handle all containers with care. Store in a cool, dry, well ventilated place.
- Always keep chemical containers closed when not in use. Replace caps on their proper containers.
- Don't inhale fumes, or allow chemicals to come in contact with your eyes, nose, or mouth. Wash your hands immediately after use.
- Follow the emergency advice on the product label in case of accidental contact, or if the chemical is swallowed. Call a doctor or the local Poison Control Center. If a doctor is needed, take the product container along with you so that the substance can be identified.
- Don't let chemicals get on surrounding surfaces or landscaping. Don't use a vacuum cleaner to clean up chemical spills.
- Never smoke around chemicals. Some fumes can be highly flammable.
- Don't store any chemicals in the exercise system equipment compartment.

HOW TO ADD CHEMICALS TO THE WATER

IMPORTANT: All swim side water chemicals, must always be dispersed into the swim area while the swim jets are running on high speed, and must run for a minimum of ten minutes. All spa side water chemicals, must always be dispensed into the filter area while jets are running for a minimum of ten minutes.

TO ADMINISTER EXERCISE SYSTEM WATER CHEMICALS:

1. Fold back the covers.
2. Turn swim jets ON, run for 10 minutes and turn OFF.
3. Carefully measure the recommended amount of chemical and disperse into swim side while swim jets are on and spa side while spa jets are on. Use care not to splash chemicals on your hands, in your eyes, on the exercise system sheet surface, or on the siding. **Risk of Drowning**: Never leave an open exercise system unattended!

⚠ **WARNING:** High sanitizer levels can cause discomfort to the user's eyes, lungs and skin. Always allow the sanitizer level to fall to the recommended range before using the exercise system.

IMPORTANT "SUPER CHLORINATION/NON-CHLORINE SHOCK TREATMENT" NOTE: After administering a super chlorination treatment or non-chlorine shock to your exercise system, leave the cover open for a minimum of 20 minutes to allow the oxidizer gas to vent. A high concentration of trapped oxidizer gas which may exist as a result of the shock treatment (not daily sanitation) may eventually cause discoloration or vinyl degradation to the bottom of the cover.

FUNDAMENTALS OF WATER MAINTENANCE

- **Testing:** Test the water weekly or each time the exercise system is used with convenient test strips or more accurate liquid/tablet reagent test kit per instructions. Critical parameters: sanitizer level, pH, Calcium Hardness (CH), and Total Alkalinity (TA). Store test equipment in a dark, cool, dry place to maintain potency.
- **Chemical Balance/pH Control:** It is important to adjust the primary

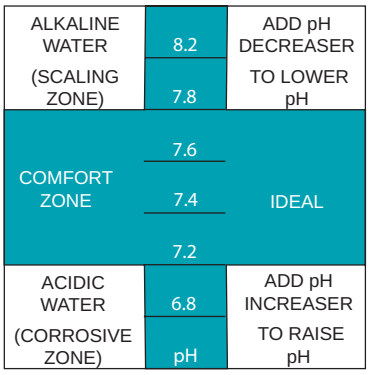

water parameters (Total Alkalinity, Calcium hardness, pH) into the recommended ranges so that they are stabilized or balanced. Balance the water chemistry every time you fill the exercise system with new water and then during the life of that body of water. Keeping the water in balance prevents damage by holding the pH in a safe range and preventing calcium scale formation on exercise system equipment. A low pH can damage metal components whereas a high pH can cause high levels of calcium to form scale. Your dealer should provide a detailed water chemistry orientation soon after your new exercise system is filled for the very first time.

- The following three water components must be kept in balance to avoid damage to the exercise system. Do balance these components in the order they are listed here as each will help you balance the next using a minimum amount of chemicals.

  1. Calcium Hardness (CH) – CH is the measure of the amount of dissolved calcium in the water. Low levels can make the water corrosive and high levels cause scale formation on exercise system components. The recommended CH reading is between **75 - 150 ppm**. If the CH level is too high, lower it with the calcium remover per instructions. Once in balance, the CH reading normally remains stable until more water is added. Great care must be taken when filling the exercise system from a water softener to ensure that the calcium remains in balance and avoid damage to the exercise system.
  2. Total Alkalinity (TA) - TA is a measure of the water's ability to resist changes of pH or buffer capacity. A low TA allows the pH to fluctuate easily. The recommended TA reading is between **80 - 120 ppm**. To raise the TA, use pH/Alkalinity Up (sodium hydrogen carbonate). To lower the TA, use pH/Alkalinity Down (sodium bisulfate). We recommend you check the TA reading once per month. Raising/lowering the TA may cause the pH readings to fluctuate widely. Ignore the pH readings on the test strip while you are balancing the TA.
  3. pH - The pH is the measure of the acidity and alkalinity. Maintaining the proper pH level will optimize the effectiveness of the sanitizer, preventing damage to the exercise system and physical discomfort for exercise system users. A low pH dissipates sanitizer, causes corrosion, and irritates exercise system users. A high pH level will neutralize sanitizer, promote scaling and cloud water. The recommended pH reading is between **7.2 - 7.8**. To lower the pH level, use pH/Alkalinity Down (sodium bisulfate). To raise the pH level, use pH/Alkalinity Up (sodium carbonate).

- **Water Conditioners:** Exercise system fill water varies from location to location and user to user, therefore it is important to consult with your dealer for an appropriate program.

  a. **CLEAN SCREEN** pre-filter –The **CLEAN SCREEN** pre-filter should be used at every fill and top-off to remove contaminants from the fill water, especially iron, copper, and manganese. Many water sources, including well water, contain high concentrations of minerals that can cause staining of the shell and plastics.

  b. Stain and Scale control – For water high in calcium and minerals, it may be necessary to use an anti-scalant like Stain and Scale control. As water evaporates from your exercise system and new water is added, the amount of dissolved minerals like calcium, copper, iron, and manganese will increase. (Minimize evaporation by keeping the cover on the exercise system whenever possible.) High iron or copper content in the water may produce green or brown stains on the exercise system.

  c. Foam Inhibitors - Soap is introduced into the exercise system water from users' bodies and swimming apparel and can cause the exercise system water to foam when the jets are used. Low levels of calcium hardness (soft water) can increase foaming. Although ozone can oxidize soap residual, it may become necessary to add Foam Inhibitors to suppress the foam. Excessive soap in the water may require a water change to resolve.

- **Oxidizers:** Ozone and Monopersulfate (MPS) are oxidizers used to prevent the buildup of contaminants, maximize sanitizer efficiency, minimize combined chlorine, and improve water clarity. They are to be used in conjunction with EPA registered sanitizers. The UVC Ozone system combines the Corona Discharge generator and a UVC lamp. The UVC lamp kills and damages bacteria DNA on contact providing a maximum water sanitation solution. Chlorine-Free Oxidizer, Monopersulfate (MPS) is a granular oxidizing chemical.
- **Sanitizers:** Maintaining the recommended residual level of an EPA registered sanitizer at all times will decrease the occurrence of unsafe bacteria and viruses in your exercise system water. The recommended Free Available Chlorine (FAC), the amount of available chlorine sanitizer, is **1 - 5 ppm**. A low FAC can allow bacteria and viruses to grow rapidly in the warm water, and a high FAC can cause discomfort to the user's eyes, lungs, and skin. Each sanitizer carries its own instructions regarding how much to use and when to add it to the exercise system water. Consult your dealer for their recommendations and instructions on proper sanitizing of the exercise system.

Watkins recommends the following sanitizer:

- Sodium Dichloro-s-Triazinetrione (sodium dichlor or chlorine)
- Biguanide
- Liquid sodium hypochlorite (do not use splashless)

WARNING: DO NOT use tri-chlor chlorine, bromo-chloro-dimethyl-hydantoin (BCDMH), or any type of compressed bromine or chlorine, acid or any type of sanitizer which is not recommended by Watkins Wellness.

THE **SWIMCROSS** *WATER MAINTENANCE PROGRAM*

FILLING THE EXERCISE SYSTEM WITH WATER

Use the **CLEAN SCREEN** pre-filter to remove unwanted contaminants such as rust, dirt, detergents, and algae from the fill water. Dissolved metals, copper, iron, and manganese are also removed. Instructions are included with the **CLEAN SCREEN** pre-filter. Always fill the exercise system through the filter compartment. Do not fill your exercise system using water from a swimming pool as pool chemicals are very different from those used in a exercise system and can damage your exercise system.

ADDING CHEMICALS TO THE WATER

All exercise system water chemicals, must always be dispersed directly into the swim area while swim jets are on high speed or dispensed into the spa side filter area with spa jets on while running for a minimum of ten minutes with the covers off.

BUILDING A SANITIZER ROUTINE

During the first month of ownership, measure the sanitizer residual daily in order to establish a baseline of sanitizer needed vs. exercise system usage. Sanitizer needed is the amount of Free Available Chlorine

needed to accommodate the number of users and their combined usage time. For example, two exercise system users for twenty minutes every day creates regular demand on the sanitizer that is used to determine how much sanitizer to add in order to maintain the proper residual. If the usage pattern increases dramatically with invited guests, the amount and frequency of sanitizer required will also increase.

PERFORMING SUPER CHLORINATION/ NON-CHLORINE SHOCK TREATMENT

A weekly or monthly super chlorination (1.5 tsp dichlor/950 liters) or shock (4tbs mps/950 liters) may be required of your chosen sanitation program. Increasing chlorine to 5 ppm for 24-48 hours removes excess waste and chloramines from the water. Sodium dichlor is 6x stronger than MPS and may be more appropriate for those users that experience heavy bather load conditions. Operate swim jets and/or spa jets and leave the covers open for a minimum of 20 minutes to allow the oxidizer gas to vent to prevent damage and discoloration to the cover and pillows after administering a super chlorination or shock to your exercise system. This type of damage is considered chemical abuse and is not covered under the terms of the limited warranty.

IMPORTANT: Always allow the Free Available Chlorine to fall below 5 ppm before using your exercise system.

⚠ **DANGER:** Never leave an open exercise system unattended, especially if there are children present!

MANUAL CHLORINE (SODIUM DICHLOR)

Watkins Wellness recommends the use of Concentrated Chlorinating Granules (sodium dichlor) for sanitizing the water. Sodium dichlor is preferred because it is totally soluble, dissolves quickly, and is nearly pH neutral. The recommended Free Available Chlorine (FAC), the amount of available chlorine sanitize the exercise system, 1.0-5.0 ppm.

If the FAC is too low: Increase the FAC by adding granulated sodium dichlor.

If the FAC is too high: Allow time to pass and the FAC level will naturally drop over time.

If the exercise system smells of chlorine: super chlorinate or shock the exercise system FAC chlorine does not have an odor whereas combined spent chlorine (chloramines) has a strong chlorine odor that can be eliminated by shocking the water.

IMPORTANT: There are several forms of stabilized chlorine available for use in exercise systems and swimming pools. It is extremely important to choose one specifically designed for exercise systems. Use of an incorrect product such as tri-chlor which has a very low pH (2.6) and dissolves too quickly in hot water, results in extremely high levels of chlorine that **WILL** cause damage to your exercise system. Use of a compressed bromine/chlorine or unapproved sanitizer **WILL** damage your exercise system and is specifically not covered under the terms of the limited warranty.

VACATION WATER CARE INSTRUCTIONS

If you plan to be away from home, follow these instructions to ensure that the water quality of your exercise system is maintained:

SHORT TIME PERIODS (3-5 DAYS):

1. Adjust the pH by following the instructions outlined in the Water Quality and Maintenance section.
2. Sanitize the water by following the shock procedures also listed in the Water Quality and Maintenance section.
3. Lock your cover in place using the coverlocks.
4. Set Water Care Mode to Away from Home (pg.13 & 17).
5. Upon your return, sanitize the water by following the shock procedures, and balance the pH.

LONG TIME PERIODS (5-14 DAYS):

Prior to leaving:

1. At least one day before you leave, set both Water Care Modes to Away.

   IMPORTANT: Exercise system water oxidizers such as sodium dichlor (chlorine) maintain their level of effectiveness substantially longer in cool water 15°C (59°F) than in hot water 38°C - 40°C (101°F to 104°F).
2. Adjust the pH as required. Sanitize the water by following the shock procedures.

Upon your return:

3. Sanitize the water by following the shock procedures. Return the set temperature to its original setting. The exercise system water will be safe for you to use once the Free Available Chlorine residual level has dropped below 5.0 ppm.

   IMPORTANT: If you will not be using your exercise system for an extended period of time (in excess of 14 days) and an outside maintenance service (or neighbor) is not available to assist with the water maintenance, draining or winterizing of the exercise system is recommended.

SUPPLEMENTAL WATER MAINTENANCE

Proper water sanitation and mineral balance (pH control) are absolutely essential for a complete exercise system water maintenance program. Here are two other popular water additives that are optional:

Mineral Deposit Inhibitors

As water evaporates from your exercise system and new water is added, the amount of dissolved minerals will increase. (Minimize evaporation by keeping the cover on the exercise system whenever possible.) The exercise system water may eventually become "hard" (Calcium Hardness too high) enough to damage the heater by calcifying its surface. Proper pH control can minimize this.

Occasionally, high iron or copper content in the water may produce green or brown stains on the exercise system. A stain and scale inhibitor may help to reduce these metals.

IMPORTANT: Well water may contain high concentrations of minerals. The use of a low water volume, extra-fine pore water filter (in-line pre-filter such as the **CLEAN SCREEN** pre-filter) will help to remove many of the larger particles during the filling of the exercise system. In-line pre-filters can be purchased at your local **ENDLESS POOLS** dealer.

Foam Inhibitors

Exercise system water requires changing due to the buildup of soap in the water. Typically, soap will cause the exercise system water to foam when the jets are used. Soap is introduced into the exercise system water from two sources: users' bodies, which retain a soap residual after showering, and swimming apparel, which retains soap after washing.

Foam inhibitors can suppress foam, but cannot remove soap from the water. Soap is very difficult to remove from the water because soap is not oxidized by any chemical added to the exercise system. Only ozone can oxidize soap. Eventually the soap build-up in the water will be concentrated, resulting in an unclean feeling on the bather's skin, which is impossible to remedy. When this occurs, it's time to drain and refill the exercise system.

GLOSSARY

The following chemical terms are used in this Water Quality and Maintenance section. Understanding their meaning will help you to better understand the water maintenance process.

Bromamines: Compounds formed when bromine combines with nitrogen from body oils, urine, perspiration, etc. Unlike chloramines, bromamines have no pungent odor, and are effective sanitizers.

Bromine: A halogen sanitizer (in the same chemical family as chlorine). Bromine is commonly used in stick, tablet, or granular form however, stick and tablet form should NOT be used.

Calcium Hardness: The amount of dissolved calcium in the exercise system water. This should be approximately 50 -150 ppm. High levels of calcium can cause cloudy water and scaling. Low levels can cause harm to the exercise system equipment.

Chloramines: Compounds formed when chlorine combines with nitrogen from body oils, urine, perspiration, etc. Chloramines can cause eye irritation as well as having a strong odor. Unlike bromamines, chloramines are weaker, slower sanitizers.

Chlorine: An efficient sanitizing chemical for exercise systems. **WATKINS WELLNESS** recommends the use of sodium dichlor-type granulated chlorine or liquid sodium hypochlorite.

Chlorine (or Bromine) Residual: The amount of chlorine or bromine remaining after chlorine or bromine demand has been satisfied. The residual is, therefore, the amount of sanitizer which is chemically available to kill bacteria, viruses and algae.

Halogen: Any one of these five elements: fluorine, chlorine, bromine, iodine, and astatine.

MPS: Monopersulfate is a non-chlorine oxidizer.

Nitric Acid: The formulation of nitric acid, a highly corrosive chemical, is a byproduct of the ozone generating process. Nitric acid is produced in very small quantities and is readily dissolved in the water stream with ozone.

Oxidizer: The use of an oxidizing chemical is to prevent the buildup of contaminants, maximize sanitizer efficiency, minimize combined chlorine and improve water clarity. See MPS and Ozone.

Ozone: Ozone is a powerful oxidizing agent which is produced in nature and artificially by man. Ozone forms no byproducts, oxidizes chloramines, and will not alter the water's pH.

pH: The measure of the exercise system water's acidity and alkalinity.

ppm: The abbreviation of "parts per million", the standard measurement of chemical concentration in water. Identical to mg/l (milligrams per liter).

Reagent: A chemical material in liquid, powder, or tablet form for use in chemical testing.

Sanitizer: Sanitizers are added and maintained at recommended residuals to protect bathers against pathogenic organisms which can cause disease and infection in exercise system water.

Scale: Rough calcium-bearing deposits that can coat exercise system surfaces, heaters, plumbing lines, and clog filters. Generally, scaling is caused by mineral content combined with high pH. Additionally, scale forms more readily at higher water temperatures.

Sodium Hypochlorite (Liquid chlorine/bleach): Unstabilized (without cyanuric acid) chlorine in liquid form. Very effective however it has a very high pH and requires acid adjustment to maintain water parameters. Never add acid directly to chlorine.

Super-Chlorination: Also known as "shock treatment." Super-Chlorination is a process of adding significant doses of a quick dissolving sanitizer ("dichlor" is recommended) to oxidize non-filterable organic waste and to remove chloramines and bromamines.

Total Alkalinity (TA): The amount of bicarbonates, carbonates, and hydroxides present in exercise system water. Proper total alkalinity is important for pH control. If the TA is too high, the pH is difficult to adjust. If the TA is too low, the pH will be difficult to hold at the proper level. The desired range of TA in exercise system water is 80 to 120 ppm.

Care and Maintenance

Your **SWIMCROSS** exercise system is manufactured from the highest quality, most durable materials available. Even so, the exercise system care and maintenance program you develop will ultimately determine how long your exercise system, and its individual components, will last. Regular maintenance and following the advice in this section will help you to protect your investment.

FILTER MAINTENANCE

At least once a week, check and clean the skimmer trays & filter basket to ensure proper filter flow. Remove leaves, foreign matter, and debris. It is very important to keep your exercise system filter cartridges clean and free of particles to ensure proper water flow. Clean filters enables the hydrotherapy system to function properly and allows for more efficient filter cycles. Depending on how frequently your exercise system is used, we recommend cleaning the exercise system filter cartridges every four weeks. If this is not done, the filter may clog and restrict water flow, which causes improper filtration, poor jet performance and may possibly freeze.

IMPORTANT: The frequency and duration of use, and the number of occupants all contribute to determining the appropriate time between filter cleanings. More use means that more frequent filter cleanings will be required.

SWIM SIDE FILTER CARTRIDGE REMOVAL AND CLEANING INSTRUCTIONS

Place the swim side contol panel in the "Standby" mode, then proceed as follows:

1. Find the filter grate inside the swim side.

2. Pull the filter grate from the bottom up until it unlocks from the wall. **IMPORTANT:** ONLY PULL FILTER GRATE UP SLIGHTLY.

3. Pull filter grate away from wall and set aside.

4. Pull skimmer tray away from wall, remove and clean.

5. To remove the filter, turn using the handle in the center of the filter counter-clockwise.

6. Pull filter up, then angle the top away from the filter compartment to pull filter completely out. Each filter has 4.5 m² of effective filter area.

7. Repeat steps 5 & 6 to remove second filter.

   Always clean the filter using a filter degreaser to remove mineral and oil build-up. Simply soak the filter in the degreaser (according to the package directions), then place the filter on a clean surface and spray until clean using a garden hose. It may be necessary to rotate the filter while spraying to remove any debris lodged between the filter pleats.

8. Re-insert filter cartridge by reversing steps 5, 6 & 7.
9. Slide skimmer try back into filter compartment reversing step 4.
10. Position filter grate as seen in step 2 & 3, grate should touch wall of exercise system slightly about black filter equipment compartment tracks. Slide filter grate down until it stops.

Repeat all of the above steps for the filters on the opposite side

NOTE: Replacement filter cartridges are available from your **ENDLESS POOLS** dealer. Refer to the back of this manual to determine the appropriate size for your exercise system.

SPA SIDE FILTER CARTRIDGE REMOVAL INSTRUCTIONS

Place the spa side contol panel in the "Standby" mode, then proceed as follows:

1. Rotate outer ring slightly to open/unlock position.
2. Pull skimmer basket with outer ring straight up and out.
3. Unscrew single fiter (counter clockwise).
4. Clean filter using instructions in step 7 of previous section.
5. Replace single filter (clockwise).
6. Lower outer ring and skimmer basket back into filter area.
7. Rotate outer ring to close/lock position.

DRAINING YOUR EXERCISE SYSTEM

Your exercise system uses two drains, one for the swim side and one for the spa side. Both drains are located on the same side as the control panels towards the bottom.

1. Turn off all RCD breakers in sub-panel, or main electrical panel.
2. Locate the drain valves (bottom, lower right of control panels) for the exercise system.
   Pull on handle (Figure 1, pliers may be used to pull handle) until you reach the mid position then rotate handle slightly to fully extended drain tube (drain cap and 2.5 cm (1") of the drain tube is exposed) (Figure 2) then remove the drain cap (Figure 3).

   NOTE: Do not remove drain cap in mid position. Attach the garden hose to the end of the drain (to avoid flooding of the foundation surrounding the exercise system) making sure not to push the drain tube inward. Route the outlet of the hose to an appropriate draining area.

   NOTE: Exercise system water with a high sanitizer level may harm plants and grass.

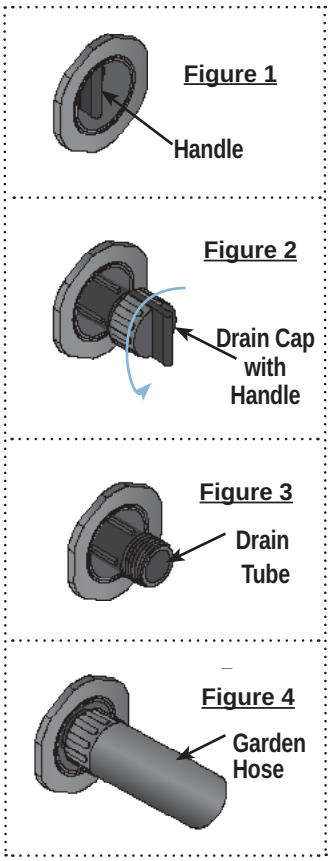

3. Push the garden hose and drain tube half-way back towards the exercise system (Figure 4) which will start the gravitational flow. Drain tube must be in the mid position for the exercise system to drain.

   IMPORTANT: All models will drain almost completely through the drain valve. Equipment such as the jet pump and heating system may not completely drain. Any water remaining within the plumbing or equipment after draining will only need to be removed if the exercise system is being winterized.
4. After your exercise system is empty, clean the shell and filter cartridges.
5. Pull and remove garden hose, replace drain cap and push drain tube back into exercise system as seen in Figure 1.
6. Follow the “START-UP PROCEDURES” to refill your exercise system.

WINTERIZING YOUR EXERCISE SYSTEM

An **SWIMCROSS** exercise system may be used year round, even in colder climates. If you will not be using the exercise system during the winter in an area where freezing is a problem, special consideration must be taken to protect the pool and auxiliary equipment if either is located outside. If you have any questions regarding precautions to take against freezing, please call your **ENDLESS POOLS** Dealer.

CARE OF THE PILLOWS

The exercise system pillows will provide years of comfort if treated with care. They have been positioned above the water level to minimize the bleaching effects of chlorinated water and other exercise system water chemicals. To extend their life, whenever the exercise system shell is being cleaned, the exercise system pillows should be removed and cleaned. Body oils can be removed with a mild soap and water solution. ALWAYS rinse off the exercise system pillows thoroughly to remove any soap residue. If the exercise system is not going to be used for a long period of time (that is during a vacation or if the exercise system is winterized), or when the exercise system water is being super-chlorinated, the exercise system pillows should be removed until the next use of the exercise system.

TO REMOVE AND REPLACE THE PILLOWS:

1. Carefully lift one end of the pillow away from the exercise system shell.
2. Continue lifting one end until all pillow retainers are released from the pillow.

   IMPORTANT: Just pulling the pillow straight up and out of the shell recess will eventually damage the pillow. This abuse is not covered under warranty.
3. To reinstall the exercise system pillow, carefully bend the pillow slightly to allow one of the pillow retainers to slip into the recess in the back of the pillow.
4. Keeping the pillow slightly bent, slide the other pillow retainer into the recess in the back of the pillow.
5. After all the pillow retainers are in place, press the pillow down into the recess in the exercise system shell.

CARE OF THE EXTERIOR

EXERCISE SYSTEM SHELL

Your **SWIMCROSS** exercise system has an acrylic shell. Stains and dirt generally will not adhere to your exercise system's surface. A soft rag or a nylon scrubber should easily remove most dirt. Most household chemicals are harmful to your exercise system's shell (see below for detailed information on cleaning agents). Always rinse off any exercise system shell cleaning agent with fresh water.

IMPORTANT:

1. The following products are the ONLY approved cleaning agents for your **SWIMCROSS** exercise system shell: plain water, Spa Shine, or Soft Scrub®. The use of alcohol or any other household cleaner other than those listed to clean the exercise system shell surface is NOT recommended. DO NOT use any cleaning products containing abrasives or solvents since they may damage the shell surface, specifically: Simple Green®, Windex® or Spa Mitt. NEVER USE HARSH CHEMICALS! Damage to the shell by use of harsh chemicals is not covered under the warranty. Always rinse off any exercise system shell cleaning agent with fresh water.
2. Iron and copper in the water can stain the exercise system shell if allowed to go unchecked. Ask your **ENDLESS POOLS** dealer about a Stain and Scale Inhibitor to use if your exercise system has a high concentration of dissolved minerals. (**WATKINS WELLNESS** recommends Stain & Scale Defense.)
3. Keep all cleaners out of the reach of children and use care when applying.

EXERCISE SYSTEM CABINET

All exercise systems use the exclusive all-climate cabinet designed for years of performance. The unique design is made from a rigid polymer for durability and adds a film finish that provides a rich appearance.

Cleaning consists of simply spraying the cabinet with a mild soap and water solution to remove any stains and residue.

Do not rub the cabinet with an abrasive material or use abrasive cleaners as this may damage its surface.

POLYESTER COVER (OPTIONAL)

The cover is made with a solution dyed polyester fabric and is an attractive, durable foam insulation product. Monthly cleaning is recommended to maintain its beauty and a longer fabric life.

To clean and condition the polyester cover:

1. Remove the covers from the **SWIMCROSS** exercise system and gently lean against a wall or fence. If a cover lifter has been installed keep cover closed and make sure all seams are closed to prevent any soap from entering the swim spa.
2. With a garden hose, spray the covers to loosen and rinse away dirt or debris.
3. Add four tablespoons of mild soap or mild dishwashing liquid with one gallons (4 liters) of lukewarm water. Clean using a soft bristle brush. Rinse thoroughly with cold water and air dry.
   IMPORTANT: Do not let the polyester dry with a soap film on it before it can be rinsed clean.
4. Scrub the cover's perimeter and side flaps. Rinse clean with cold water.
5. Rinse off the underside of the cover with water only (use no soap), and wipe it clean with a dry rag.

SERVICE INFORMATION

GENERAL INFORMATION

Your **SWIMCROSS** exercise system has been designed to provide years of trouble-free use. As with any appliance, problems may occasionally occur that require the expertise of a qualified service person. Though such simple repairs as resetting a RCD switch or breaker, or resetting a high limit thermostat may not require a service call, they may indicate that a more serious condition exists. These conditions may require an experienced service person. Before calling for service, please refer to the Troubleshooting Guide. Always retain your original sales receipt for future reference.

RCD AND HIGH LIMIT THERMOSTAT

If your exercise system fails to operate at any time, first check the power supply to the exercise system.

Check each of the RCD breakers in the subpanel. If a RCD has tripped, reset it. If it will not reset, this may be an indication of a ground fault (short circuit) within the electrical components. Contact an Authorized Service Technician for a complete diagnosis.

If upon checking the RCD you find that they have not tripped, check the house breaker panel and ensure the main breaker for the electrical circuit supplying the exercise system has not tripped. If it has, this is an indication that the circuit was either overloaded or a ground fault exists between the breaker panel and the exercise system receptacle or subpanel. Contact a qualified electrician.

If upon checking the main house breaker and exercise system RCD you find no failures, check the high limit thermostat. To check it, simply turn off power to the exercise system for 30 seconds. This will automatically reset the high limit thermostat if it has tripped. If the exercise system energizes once you turn the power back on, this indicates reduced water flow through the heating system. Tripping of the high limit thermostat is normally a result of one or a combination of these problems. 1) clogged filter cartridge(s), 2) blockage within the system plumbing, 3) a non-functioning heater circulation pump, 4) power was not disconnected from the exercise system before it was drained, 5) an air lock in the plumbing lines. (The Power Indicator on the front of the exercise system's control panel will also be blinking if the high limit thermostat circuit has tripped.)

If the exercise system does not function after tripping and resetting the RCD or resetting the high limit thermostat, then the problem should be referred to an Authorized Service Technician. Refer to the Troubleshooting Guide for additional service information.

MISCELLANEOUS SERVICE INFORMATION

The control and high-limit thermostats are equipped with electronic sensors that are connected to the exercise system's plumbing. Never cut or kink the wires that connect the sensors to the thermostats within the control box.

The jet pump is equipped with a thermal overload cutoff switch that is designed to protect the pump from overheating. If the pump shuts itself off in an older exercise system, it could indicate failure of the pump motor bearings. If the pump shuts itself off in a new exercise system, it is usually the result of one or a combination of the following factors:

- Thermal overload: Although mass-produced, not all thermal overload cutoffs are exactly the same. Some are more sensitive than others and will shut the pump off at lower temperatures.
- High temperature: All **SWIMCROSS** exercise system models are equipped with a jet pump shroud that vents the heat generated by the pump motor to the outside of the equipment compartment, and back into the exercise system water. If the vent is blocked by masonry, grass or debris, overheating of the jet pump may occur. Once the pump motor has cooled sufficiently and any blockage has been removed from the vent opening, the jet pump can be restarted.
- Friction: Sometimes the moving parts of a new pump are tight enough to cause heat build-up due to friction. After a normal break-in period, the pump will run cooler.
- Improper wiring: If the exercise system is connected with an extension cord, and/or the house wiring is undersized, the pump may starve for voltage and therefore may draw more amperage and generate excessive heat.
- If the pump is shutting down due to excessive heat, make sure the equipment compartment has adequate ventilation. The air gap at the bottom must not be blocked. Should your jet pump continue to shut off after short periods of use, contact a qualified service technician.

ACTS INVALIDATING WARRANTY

The limited warranty is void if the **SWIMCROSS** exercise system has been improperly installed, subjected to alteration, misuse, or abuse, or if any repairs on the exercise system are attempted by anyone other than an authorized representative of Watkins Wellness. Alteration shall include any component or plumbing change, electrical conversion, or the addition of any non-approved sanitation or water purification device or heating system which contributes to component or unit failure or unsafe operating system. Misuse and abuse shall include any operation of the exercise system other than in accordance with Watkins Wellness printed instructions, or use of the exercise system in an application for which it is not designed; specifically: use of the exercise system in a non-residential application; damage caused by operation* of the exercise system at water temperatures outside the range of 2°C and 49°C (35°F and 120°F); damage caused by a dirty, clogged or calcified filter cartridge; damage to the exercise system surface caused by the use of tri-chloro chlorine, BCDMH, misuse of chemical tablets in a floater, acid, or any other exercise system chemicals or exercise system surface cleaners which are not recommended by Watkins Wellness; damage caused by allowing undissolved exercise system sanitizing chemicals to lie on the exercise system surface (no exercise system surface material can withstand this kind of abuse); damage to components or exercise system surface caused by improper water chemistry maintenance; and damage to the exercise system surface caused by leaving the exercise system uncovered while empty of water and in direct exposure to sunlight (this may cause solar heating distress in warm weather regions). These are considered abuses and may invalidate this warranty.

*Operation of the exercise system does not mean "use" of the exercise system! Watkins Wellness does not recommend using the exercise system if the water temperature is above or below the exercise system's control panel temperature range.

DISCLAIMERS

Watkins Wellness shall not be liable for loss of use of the **SWIMCROSS** exercise system, or other incidental, consequential, special, indirect, or punitive costs, expenses or damages, which may include but are not limited to the removal of a permanent deck or other custom fixture, or the necessity for crane removal. Any implied warranty shall have a duration equal to the duration of the applicable limited warranty stated above. Some states do not allow limitations on how long an implied warranty lasts. Under no circumstances shall Watkins Wellness or any of its representatives be held liable for injury to any person or damage to any property, however arising.

Some states do not allow the exclusion or limitation of incidental or consequential damages, so the above limitations may not apply to you.

WATKINS WELLNESS CUSTOMER SERVICE

If you have any questions about any aspect of your **SWIMCROSS** exercise system set-up, operation or maintenance that have not been answered by this manual, consult your **ENDLESS POOLS** dealer.

TROUBLESHOOTING

Should you experience any problem whatsoever, do not hesitate to contact your authorized **ENDLESS POOLS** dealer. Located below and on the next page are some tips to help you to diagnose and rectify some more common sources of trouble yourself, if you choose to do so.

EXERCISE SYSTEM WATER MAINTENANCE TROUBLESHOOTING GUIDE		
Problem	Probable causes	Solutions
Cloudy Water	• Dirty filters • Excessive oils / organic matter • Improper sanitization • Suspended particles / organic matter • Overused or old water	• Clean filters • Shock exercise system with sanitizer • Add sanitizer • Adjust pH and/or alkalinity to recommended range • Run jets pump(s) and clean filters • Drain and refill the exercise system
Water Odor	• Excessive organics in water • Improper sanitization • Low pH	• Shock exercise system with sanitizer • Add sanitizer • Adjust pH to recommended range
Chlorine Odor	• Chloramine level too high • Low pH	• Shock exercise system with sanitizer • Adjust pH to recommended range
Musty Odor	• Bacteria or algae growth	• Shock exercise system with sanitizer–if problem is visible or persistent, drain, clean and refill the exercise system
Organic buildup / scum ring around exercise system	• Build-up of oils and dirt	• Wipe off scum with clean rag – if severe, drain the exercise system , use a exercise system surface and tile cleaner to remove the scum, and refill
Algae Growth	• High pH • Low sanitizer level	• Shock exercise system with sanitizer and adjust pH • Shock exercise system with sanitizer and maintain sanitizer level
Eye Irritation	• Low pH • Low sanitizer level	• Adjust pH • Shock exercise system with sanitizer and maintain sanitizer level
Skin Irritation / Rash	• Unsanitary water • Free chlorine level above 5 ppm	• Shock exercise system with sanitizer and maintain sanitizer level • Allow free chlorine level to drop below 5 ppm before exercise system use
Stains	• Total alkalinity and/or pH too low • High iron or copper in source water	• Adjust total alkalinity and/or pH • Use a metal deposit inhibitor
Scale	• High calcium content in water – total alkalinity and pH too high	• Adjust total alkalinity and pH – if scale requires removal, drain the exercise system, scrub off the scale, refill the exercise system and balance the water

GENERAL OPERATION TROUBLESHOOTING GUIDE		
Problem	Probable causes	Solutions
Entire exercise system is inoperative	• Power failure • RCD tripped • Heater high-limit thermostat tripped	• Check power source • Reset RCD; call for service if it will not reset • Disconnect power for at least thirty seconds to reset heater high limit. If it will not reset, check for clogged filters. If tripping continues, call for service.
Exercise system does not heat; jets and light operate	• Integrated pressure switch open • Circulation pump thermal cut-off tripped • Water Care Mode	• Check for clogged filters. Integrated pressure switch will reset when the flow of water through the heater has been restored. Call for service if the heater trips frequently. • Check for clogged filters or air locks in plumbing. Disconnect power to the exercise system, allow circulation pump to cool. Circulation pump thermal cut-off will reset when pump has cooled and power is reapplied. Call for service if circulation pump thermal cut-off trips frequently. • Check which Water Care Mode your are in and change if necessary.
Jets weak or surging	• Exercise system water level too low • Filters clogged • Water valves are closed	• Add water • Clean filters • Open water valves
Lights inoperative	• Light wiring or assembly is faulty	• Call for service, replace light assembly
Exercise system not heating properly	• Temperature set too low • Exercise system cover improperly positioned • Dirty Filter • Water Care Mode	• Set control panel to a higher temperature. • Align exercise system cover • Clean filter • Check which Water Care Mode your are in and change if necessary.
Pump motor will not function	• Motor overload condition • Control switch failure if jet symbol does not come on	• Let cool for one hour. Motor overload will reset automatically. If problem persists, contact your **ENDLESS POOLS** dealer • Disconnect exercise system and contact your **ENDLESS POOLS** dealer
Surging pump or motor	• Low water level	• Add water to normal level (15 cm (6") below bar top)
Pump motor runs, but low or no water/ jet pressure	• Air control valve closed • Water Valves are closed • Dirty filter cartridge • Jet blocked • Clogged suction or skimmer basket	• Open air valve • Open any closed water valves • Clean filter cartridge • Remove jet face eyeball and clean orifice • Clean suction cover or skimmer basket
After filling or refilling the exercise system: a jet pump is operating, but water is not flowing from any of its jets	• Pump is not properly primed	• Turn off power to the exercise system at the breaker and remove the equipment compartment door. • Loosen the union on the top of the pump(s) to allow the air to escape, and then hand-tighten the union(s). • Turn power back on, activate the pump, and check to make sure the union is tight enough to keep it from leaking. Replace the equipment doors.
Pump motors run for 1 minute and then shuts off	• Pumps and lines are purging (swim side) • Pumps and lines are purging (spa side)	• Change purge cycle time (see pg. 16) • See filter cycle time (pg. 20)
"Heater Suspended" blinking	• Turning temp down and up while heater is on.	• System will automatically cycle and message will go off within 5 minutes.

TROUBLESHOOTING ERROR CODES	
Error Code	**Cause & Solution**
HR	An internal hardware error has been detected . Reset the breaker, if the problem persists, call for service.
HL	The system has shut the heater down because the temperature at the heater has reached 48°C (119°F). Do not enter the water! Remove the cover and allow the water to cool down, then shut power off and power back up again to reset the system.
AOH	Temperature inside the equipment compartment is too high, causing the internal temperature in the control box to increase above normal limits. Shut off power, open equipment compartment and allow area to cool. Close equipment compartment and repower once compartment has cooled down.
FLO	The system does not detect any water flow while the primary pump is running. Check and open water valves. Check for water level. Clean filter. If the problem persists, call for service.
Prr	A problem is detected with the temperature probe. Call for service.
OH	The water temperature in the exercise system has reached 42°C (108°F). Do not enter the water! Remove the cover and allow the water to cool down to a lower temperature. Call for service if problem persists.
UPL	No low-level configuration software has been installed into the system. Call for service.

EXERCISE SYSTEM SPECIFICATIONS

This manual contains installation, operating, maintenance, and service information for the following **SWIMCROSS** exercise system:

	Footprint dimensions	Height	Swim side effective filter area	Spa side effective filter area	Swim side heater (Watts)	Spa side heater (Watts)	Swim side water capacity	Spa side water capacity	Dry weight	Filled weight*	Dead weight*	Electrical requirements
X2000	610 cm x 226 cm 20' x 7'5"	147 cm 58"	18 m²	5 m²	3,000	3,000	7,570 liters 2,000 gallons	1,325 liters 350 gallons	1,570 kg 3,460 lbs	11,245 kg 24,790 lbs	1,220 kg/m² 250 lbs/ft²	**50Hz Single phase RCD protected circuit** 230 volt, 24/24 amp Loads 32/32 amp RCD Breakers

Surface Water Area:
Swim: 7.4 m (80.3 ft)
Spa: 2.6 m (27.7 ft²)

Maximum Depth:
Swim: 122 cm (48")
Spa: 122 cm (48")

CAUTION: Watkins Wellness suggests a structural engineer or contractor be consulted before the exercise system is placed on an elevated deck.

Ask your **ENDLESS POOLS** dealer for more information.

*** NOTE:** The "Filled weight" and "Dead weight" of the exercise system includes the weight of 10 occupants (assuming an average occupant weight of 80 kg (175 lbs)).

©2025 WATKINS WELLNESS.
ENDLESS POOLS is a trademark of WATKINS WELLNESS, registered in the U.S., Canada, CTM and other countries.

WatkinsWellness®
Feel good. Live well.™

Watkins Wellness EU
Siemenslaan 10
B-3650 Dilsen – Stokkem Belgium

Watkins Wellness
Vista, California
USA

305038.26

305038.26 A (10/25)